JUNIOR 4.0

VVVF Gearless

Quick installation guide

English

V 2.4

INDEX

PHASE 0 **INSTALLATION OF BASE ELEMENTS . . . . . pg. 6**
INSTALLING THE CONTROLLER . . . . . pg. 6
CONNECTING THE MAIN POWER SUPPLY . . . . . pg. 7
CONNECTING MOTOR OUTPUTS . . . . . pg. 8
FIXING THE TRAVELLING CABLE . . . . . pg. 9
CONNECTING THE TRAVELLING CABLE TO THE CAR DISPATCHING BOARDS . . . . . pg. 9

PHASE 1 **TEMPORARY MODE & ELECTRICAL CONNECTIONS . . . . . pg. 10**
TEMPORARY OPERATIONS . . . . . pg. 10
MOTOR DATA SELF-LEARNING PROCEDURE . . . . . pg. 11
INSTALLING THE SAFETY CHAIN . . . . . pg. 12
CONNECTING THE ELECTROMECHANICAL LOCK . . . . . pg. 14
CONNECTING CAR DOORS OPERATOR . . . . . pg. 15
CONNECTING LIGHT BARRIERS . . . . . pg. 19
CONNECTING LANDING DOORS OPERATOR . . . . . pg. 20
CAR POSITION READING SYSTEM . . . . . pg. 21
CONNECTING THE CAR ILLUMINATION . . . . . pg. 23
CONNECTING THE INSPECTION SWITCH . . . . . pg. 26
INSTALLING THE CAR PANEL . . . . . pg. 27
INSTALLING THE FLOOR PANELS . . . . . pg. 28
BDU PROGRAMMING . . . . . pg. 29
INSTALLING THE EMERGENCY PHONE . . . . . pg. 30
INSTALLING THE LLEC7 LIFT LOAD ELECTRONIC CONTROL DEVICE . . . . . pg. 32

PHASE 2 **NORMAL MODE & SYSTEM ADJUSTMENTS . . . . . pg. 33**
SWITCH TO NORMAL SERVICE MODE . . . . . pg. 33
ADJUSTING FLOOR STOPPING ACCURACY . . . . . pg. 34
CONNECTIVITY (FUSION APP) . . . . . pg. 35
TESTS . . . . . pg. 37
BASIC TROUBLESHOOTING . . . . . pg. 40
RESCUE OPERATION FOR TRACTION LIFTS . . . . . pg. 41
ADVANCED SETTINGS . . . . . pg. 42

JUNIOR 4.0 - ELECTRIC SYSTEM FOR HOMELIFTS

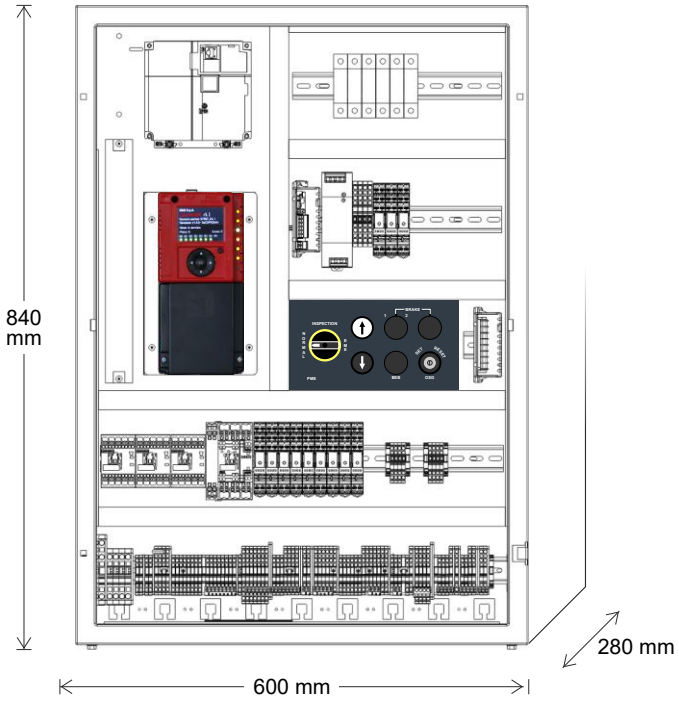

Gearless: 2,2kW

600x840x280 mm

~ 30 kg

✔ Single Phase

✔ 7 stops max.

EN 81-41 | pr EN 81-42

SAFETY NOTES

Installation

The control panel must be installed internally with a degree of pollution of not more than 2.
The cabinet has an IP2X degree of protection.
The controller setup and maintenance has to be made by qualified technicians after having carefully read the documentations and electrical schemes provided with the controller.
Protection toward indirect contacts has to be realized through magnetothermic and differential switches and a grounding system. Unless otherwise specified, the customer is requested to provide these protections.
Please refer to the wiring diagram supplied with the control panel for the following protection circuits:

- magnetotermic protection of the motor circuit
- magnetotermic protection of the safety circuit
- protection fuses of all other circuits

Protection measures against electric shock:

- The control panel case of the is metallic and must be grounded as indicated in the circuit diagram supplied with the control panel.
- The command and control circuits (24V) are galvanically separated from the main power supply as indicated in the wiring diagram supplied with the control panel.

Maintenance

For control panel's maintenance, please refer to the manual supplied with the control panel. During periodic inspections of the system, check the alarm circuits' battery status of the and the floor return circuit (if present) .
Refer to the packaging instructions to handle and move the control panel.

7-SEC SAFETY MODULE

Description
SECU.24 module is an electronic device installed in DMG lift control panel that allows to check the status of 7 point of the safety chain of the lift.
The main function of this module is to guarantee galvanic isolation between the safety circuit and the electronic circuits of the control panel.
There is only one version of this module available:

- SECU.24 for control panel with safety circuit powered at 24 V DC [-15 / + 10%]

Installation
The SECU.24 module is supplied by DMG already installed and connected in the control panel. No intervention by the installer is required during commissioning of the control panel.

The common of the connections to the electric safety chain is traced on the printed circuit board in such way, that the common to the contactors or relay-contactors will switch off at interruption of the common (CBC(1) / CBC(9)).

Working conditions
The SECU.24 module is installed in a metal earthed cabinet with minimum IP20 protection and fixed on a DIN rail at following service condition:

- Indoor Use.
- Temperature: -5°C / +40°C
- Relative Humidity: must not exceed 50% at a max temperature of +40°C; may increase at lower temperatures, for example, can be 90% at 20°C.

Maintenance
In the event of a fault, the device must be replaced, it must not be opened or repaired.

If LM2A/C inverter is present, restart the controller once a year.

Tutti i prodotti e i nomi di aziende menzionati nel presente manuale sono marchi o marchi registrati dei rispettivi titolari.
Le informazioni contenute in questo manuale possono variare senza preavviso per miglioramenti apportati.

SYSTEM LAYOUT

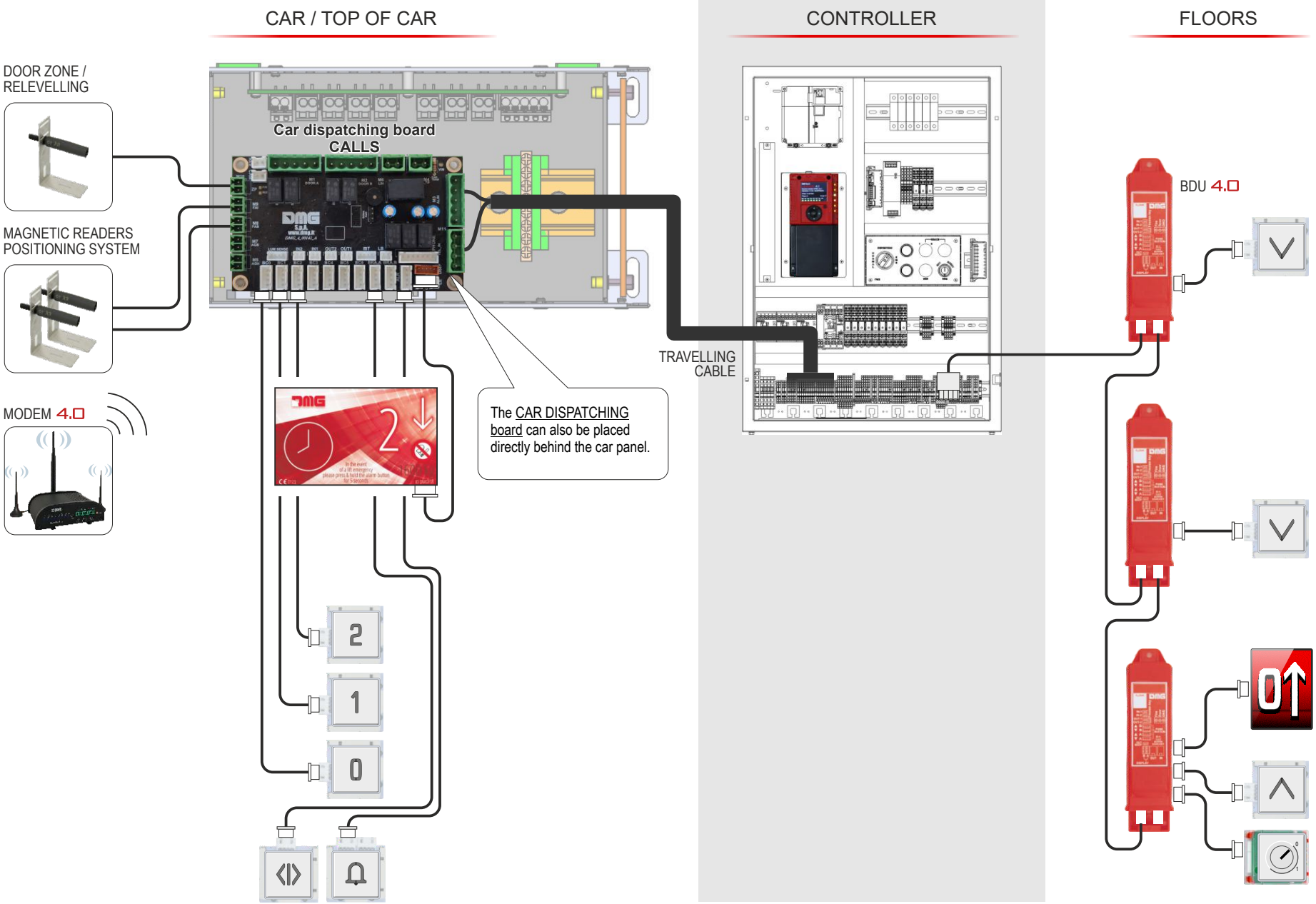

SYSTEM COMPONENTS

TOP OF CAR

QJ4.CTBOXS
Car dispatching boards (in the top of car box)

QJ4.C32CW
Travelling cable kit (x m)

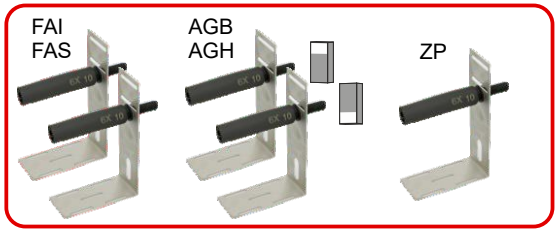

QJ4.CTKIMP.H5
Magnetic readers positioning system + door zone/relevelling + top/bottom reset proximity switches and reset magnets

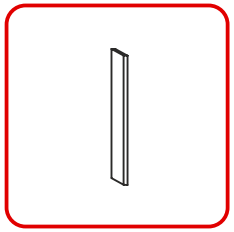

QJ4.SHCAL100
1 magnet

QJ4.KSHCAL (manual doors)
1 x 200mm
4 x 150 mm

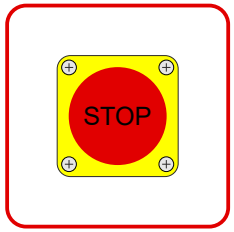

QJ4.CTPS
Top of cabin stop

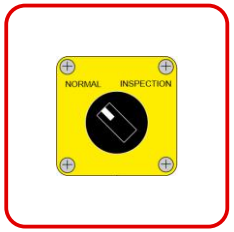

QJ4.CTPM
Inspection box

QJ4.CTPSTISP
Inspection box + Stop

CAR

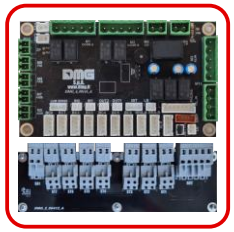

QJ4.CTSTI
Car dispatching boards (behind car panel)

SHAFT

QJ4.SHEX1/2
Final limit switch kit

QJ4.SHP_ / QJ4.SHC_
Safety chain (doors / pit)

QJ4.SHPSH
Pit stop

C40.BDU
Floor interface (BDU)

QJ4.SHLED_F05 / F15 + QJ4.SHLED_V
Shaft illumination kit (5 / 15 m)

PHASE 0 - INSTALLATION OF BASE ELEMENTS

INSTALLING THE CONTROLLER

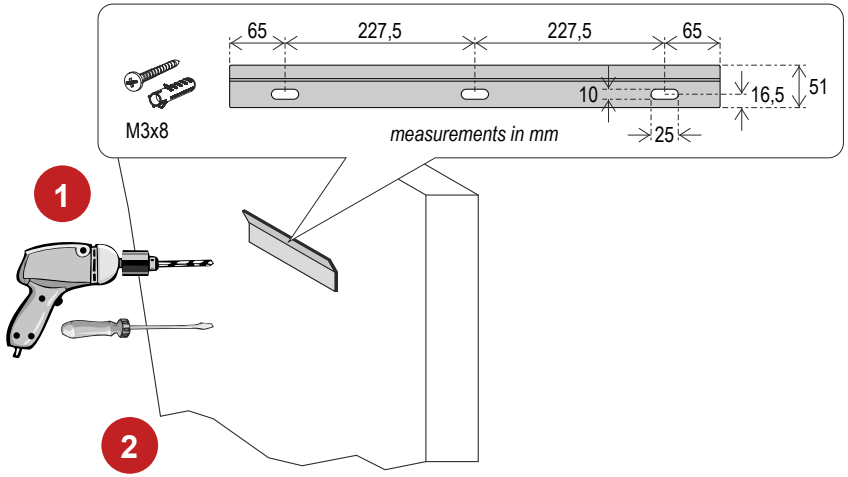

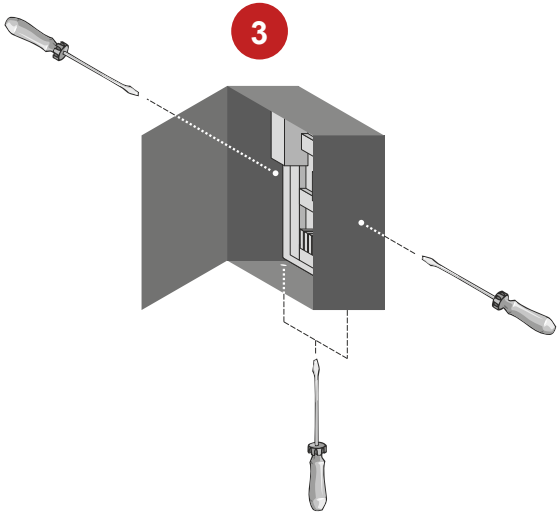

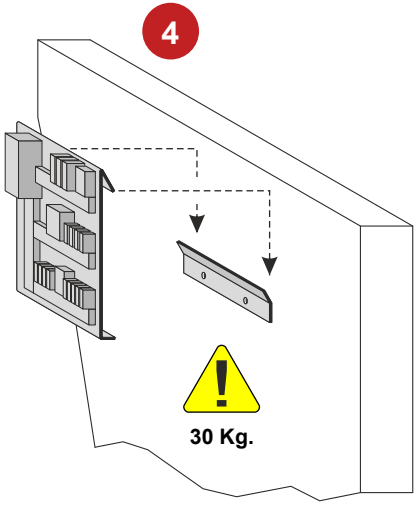

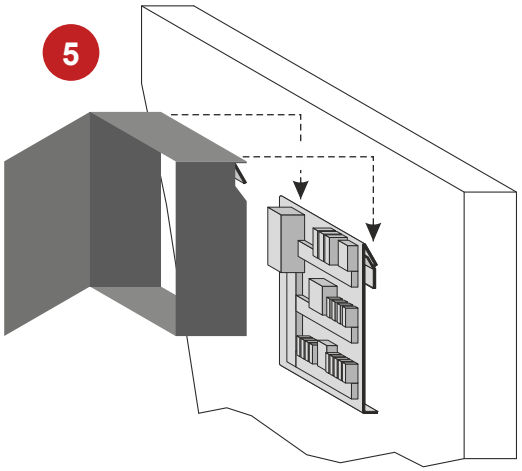

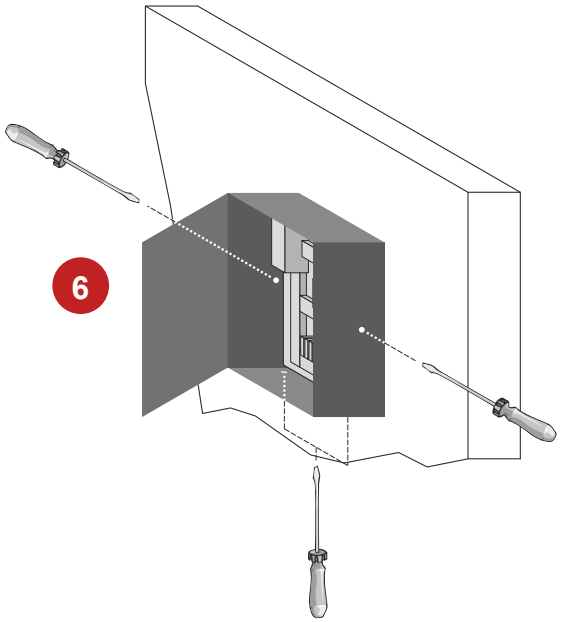

Caution: perform all wirings and connections before hanging the cabinet to the back plate

CONNECTING THE MAIN POWER SUPPLY

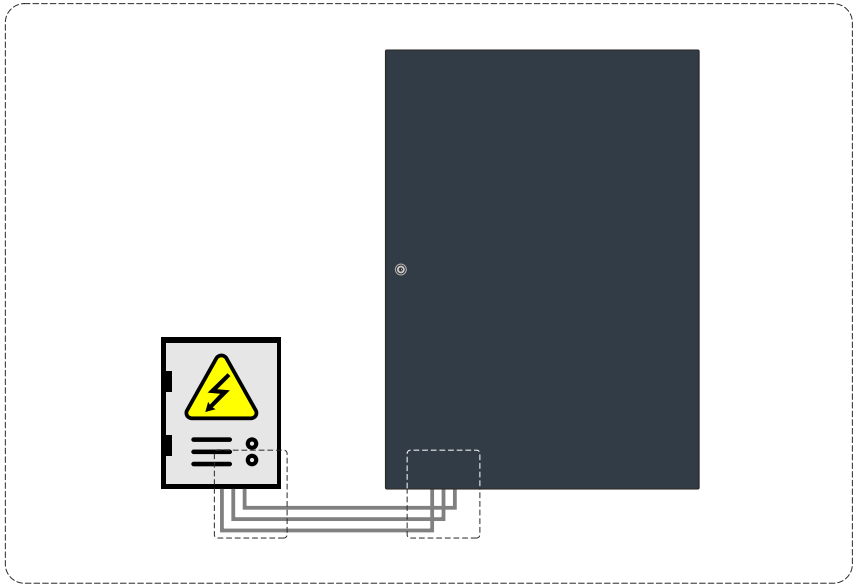

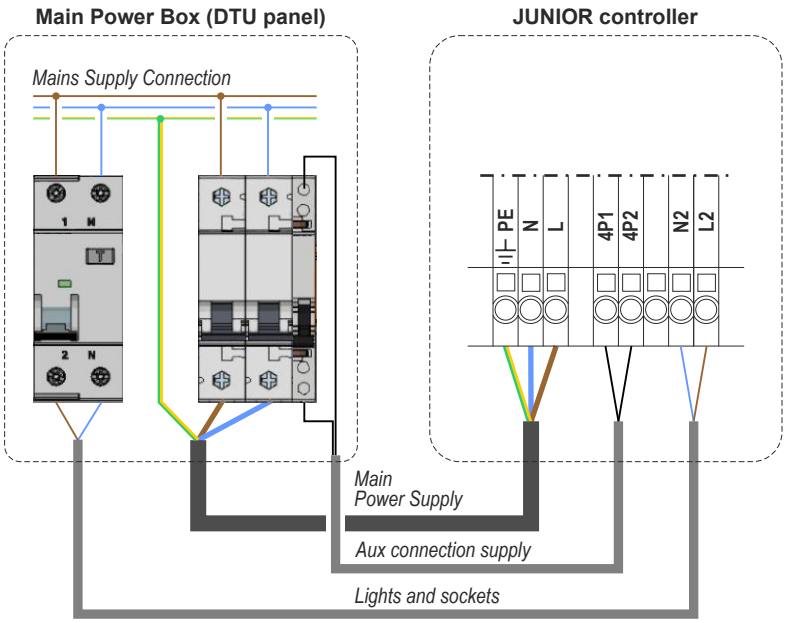

CONNECTING MOTOR OUTPUTS

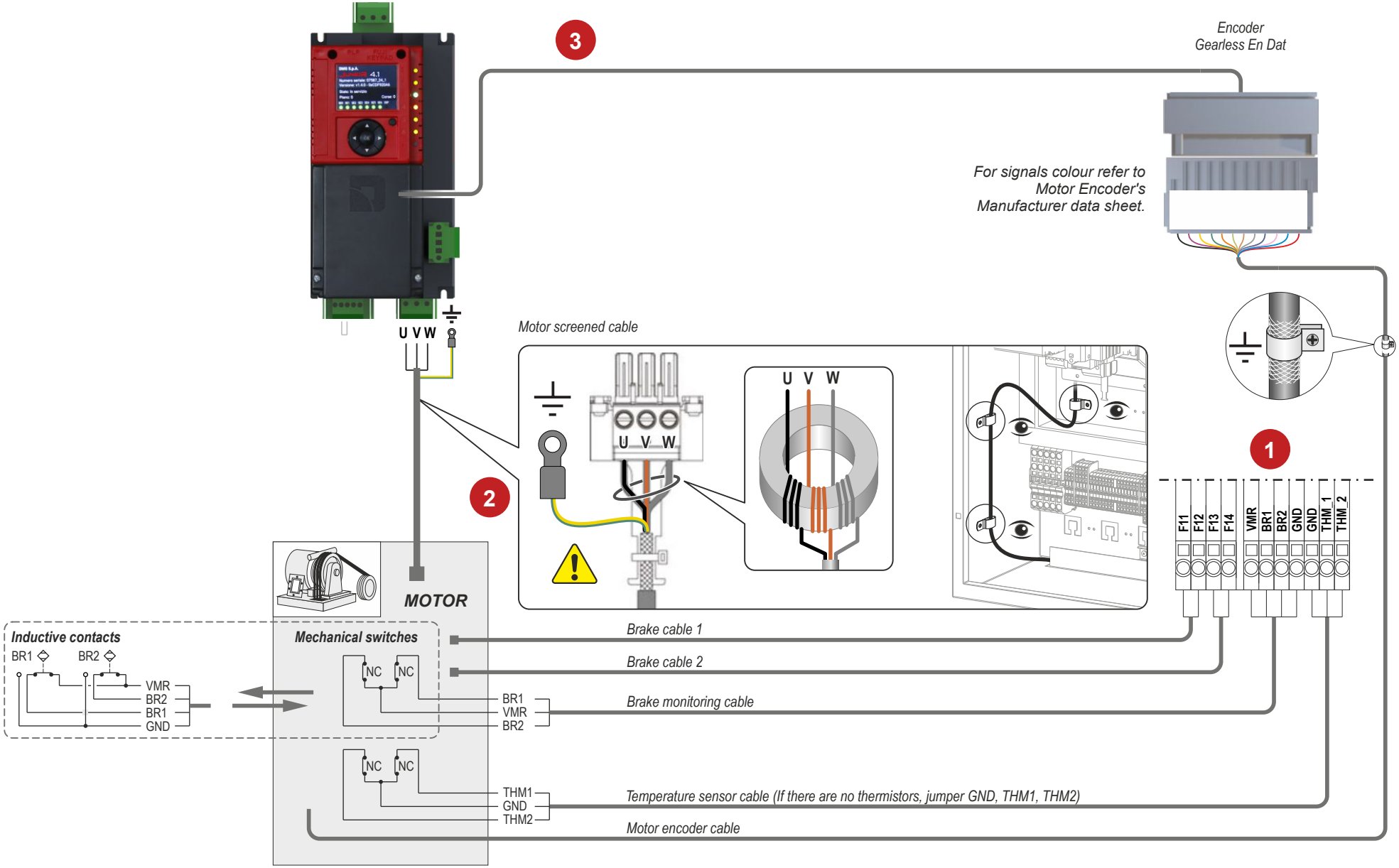

FIXING THE TRAVELLING CABLE

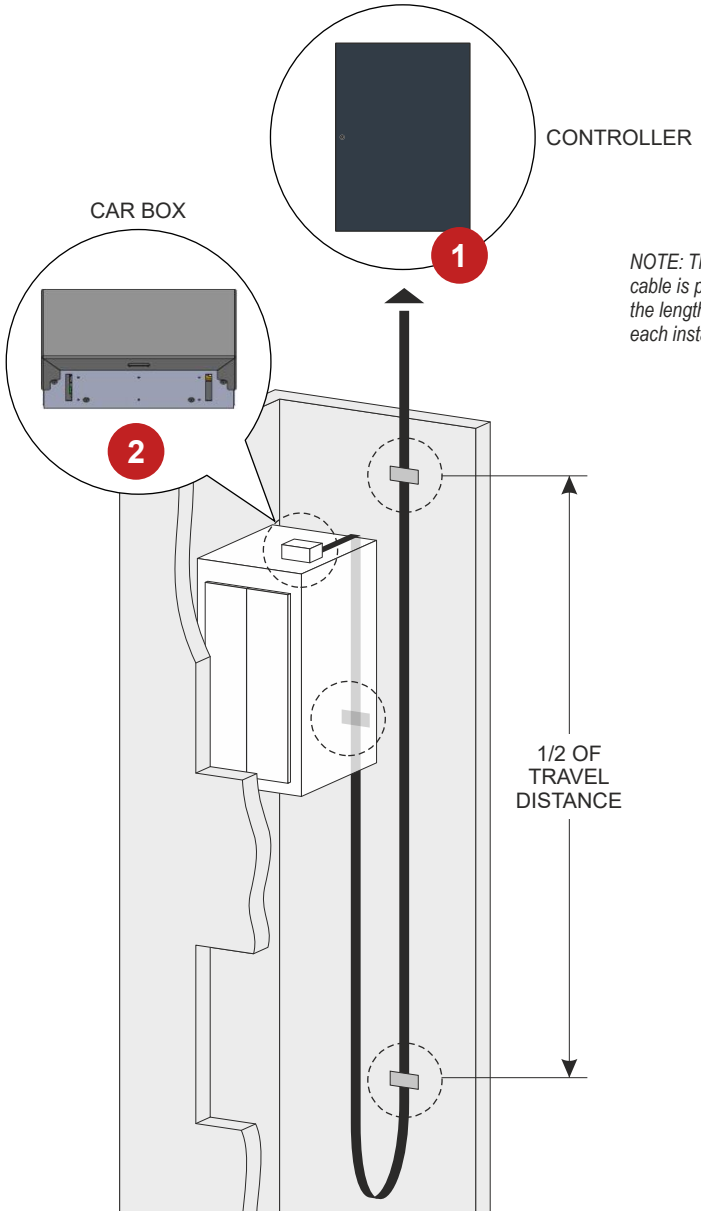

NOTE: The travelling cable is provided in the length suitable for each installation.

CONNECTING THE TRAVELLING CABLE TO THE CAR DISPATCHING BOARDS

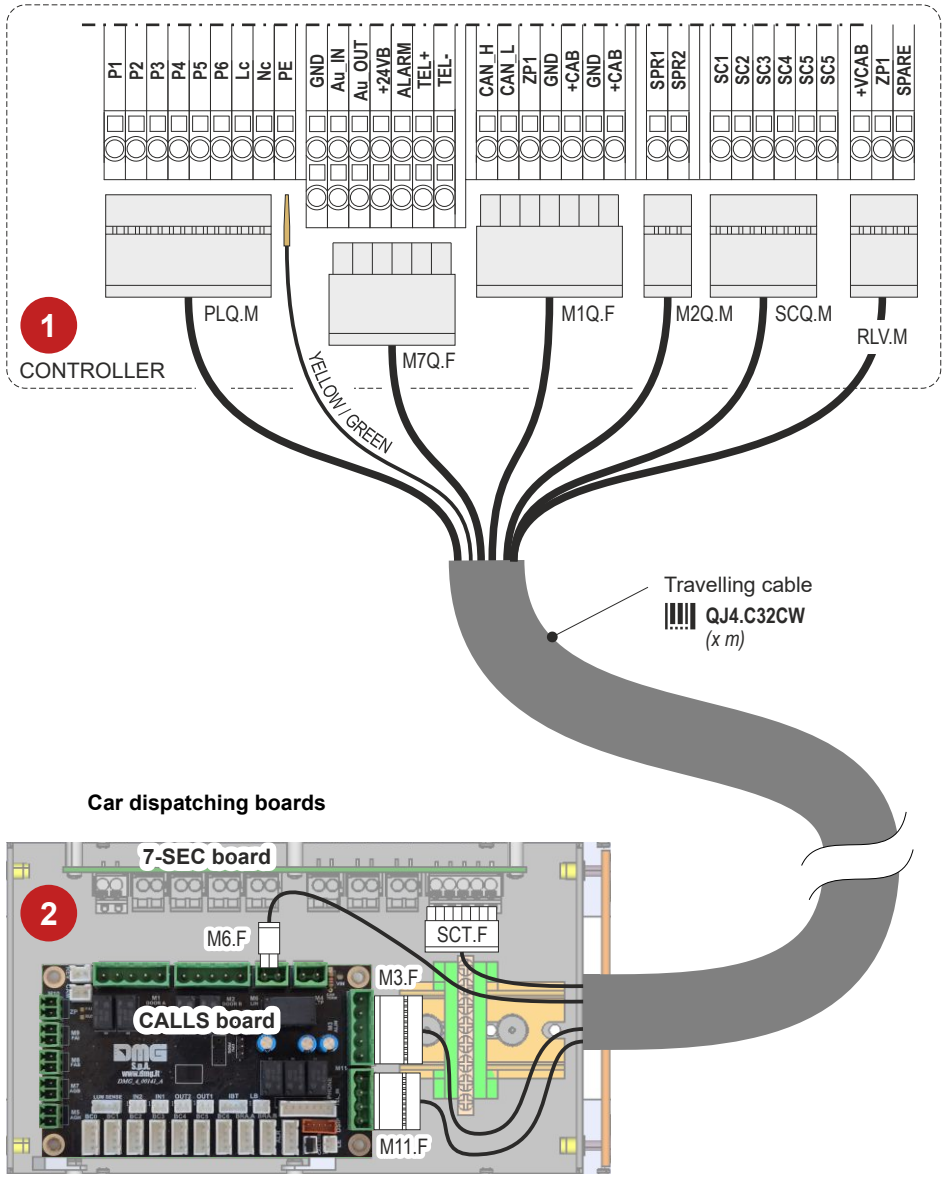

PHASE 1 - TEMPORARY MODE & ELECTRICAL CONNECTIONS

TEMPORARY OPERATIONS

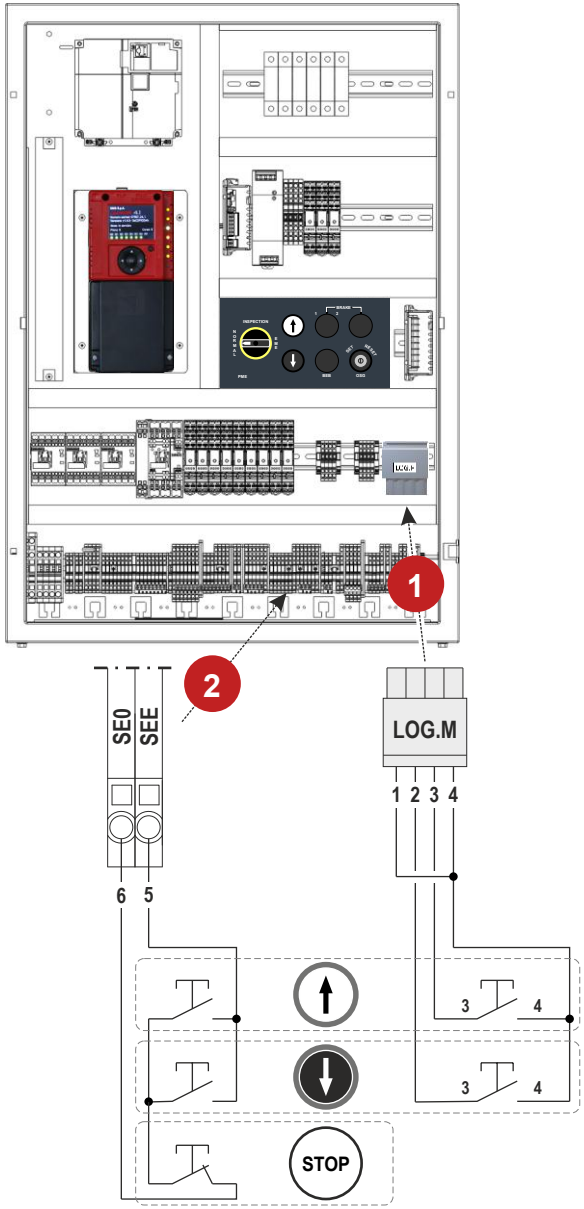

3

Switch on power supply

4

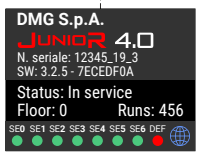

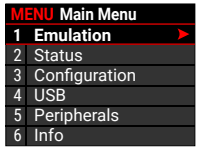

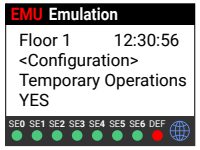

You may need to press (or hold) ESC several times to start from the menu's home screen.

All displays, if already installed, will show "P" on the screen.

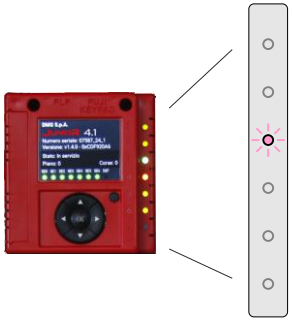

✓ LED3 Verify that the pink LED lights up

MOTOR DATA SELF-LEARNING PROCEDURE

- MRL GEARLESS motors -

1

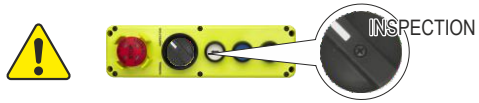

2

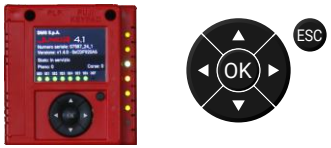

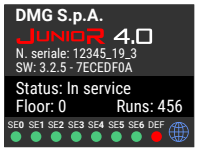

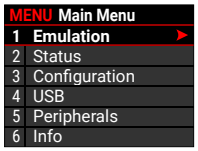

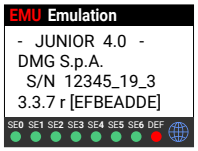

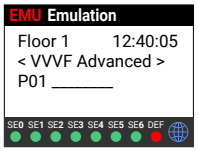

VVVF Fuji

P01 - Motor poles	--->>>	Enter the number of motor poles
F03 - Maximum speed	--->>>	Enter the maximum motor speed (RPM)
F04 - Rated Speed	--->>>	Enter the rated motor speed (Hz)
F05 - Rated Voltage	--->>>	Enter the rated motor Voltage
P03 - Motor Rated Cur	--->>>	Enter the rated current intensity of the machine
P02 - Motor Rated Cap	--->>>	Enter the rated power of the machine
LM2 INVERTER		
C11 - High speed	--->>>	Set high speed C11 (value specified on the motor nameplate)
C10 - Middle speed	--->>>	Set inspection/intermediate speed C10
C07 - Creep speed	--->>>	Set low speed C07 (typically 10% of C11)
L01 - PG select	--->>>	Set the motor encoder type (ENDAT=4 ; SIN-COS=5)
L02 - PG resolution	--->>>	Set the motor encoder resolution (typically 2048)
L03 - P.P. Tuning		

These paramteres are programmed in factory, if values are provided with the order..

3

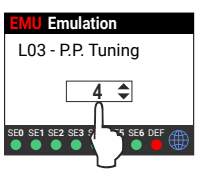

Select

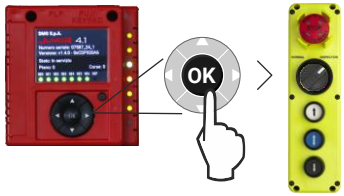

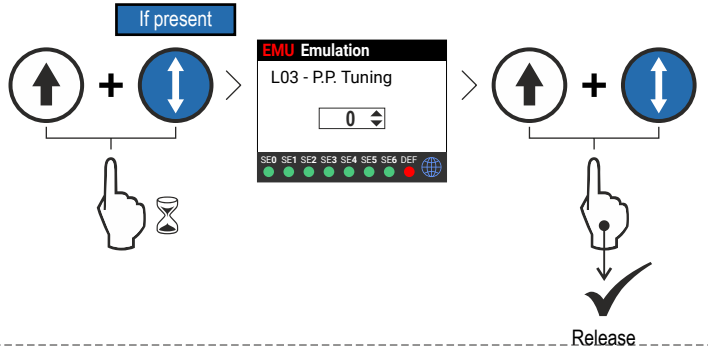

4 = Static tuning, depending on the motor type
5 = Dynamic tuning (free from ropes)

- In case something is wrong during the procedure, the error is registered in the menu "ERRORS" (52=er7 - Error VVVF - Sub xxx). If so, refer to the troubleshooting to resolve the issue, then clear the error and repeat the procedure.
- At the end of the procedure, press the UP/DOWN button and check the correct movement direction of the car; if not correct, invert values of parameters E98 and E99.

INSTALLING THE SAFETY CHAIN

IN THE **CAR**

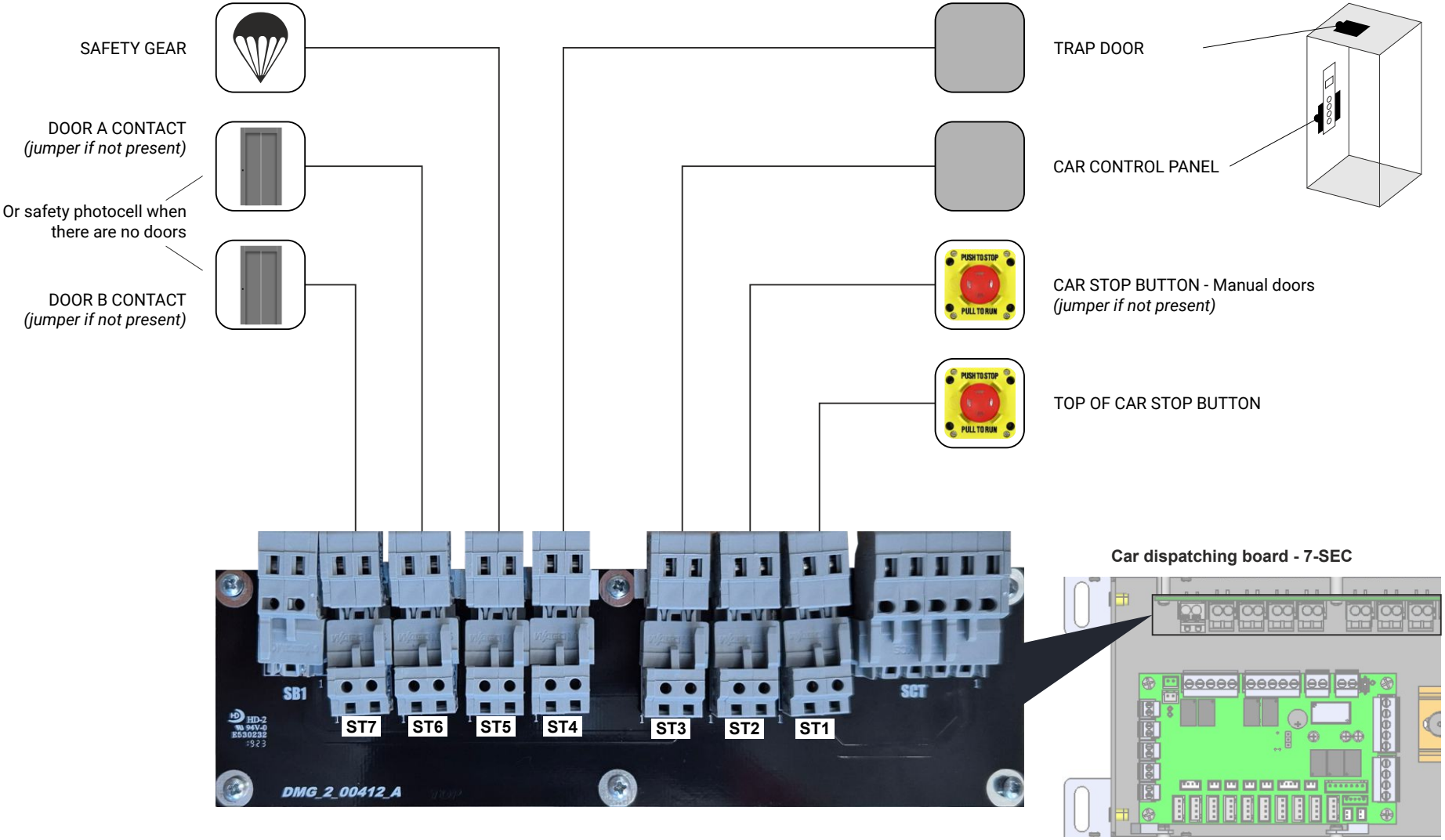

INSTALLING THE SAFETY CHAIN (GEARLESS/GEARED WITHOUT OSG A3)

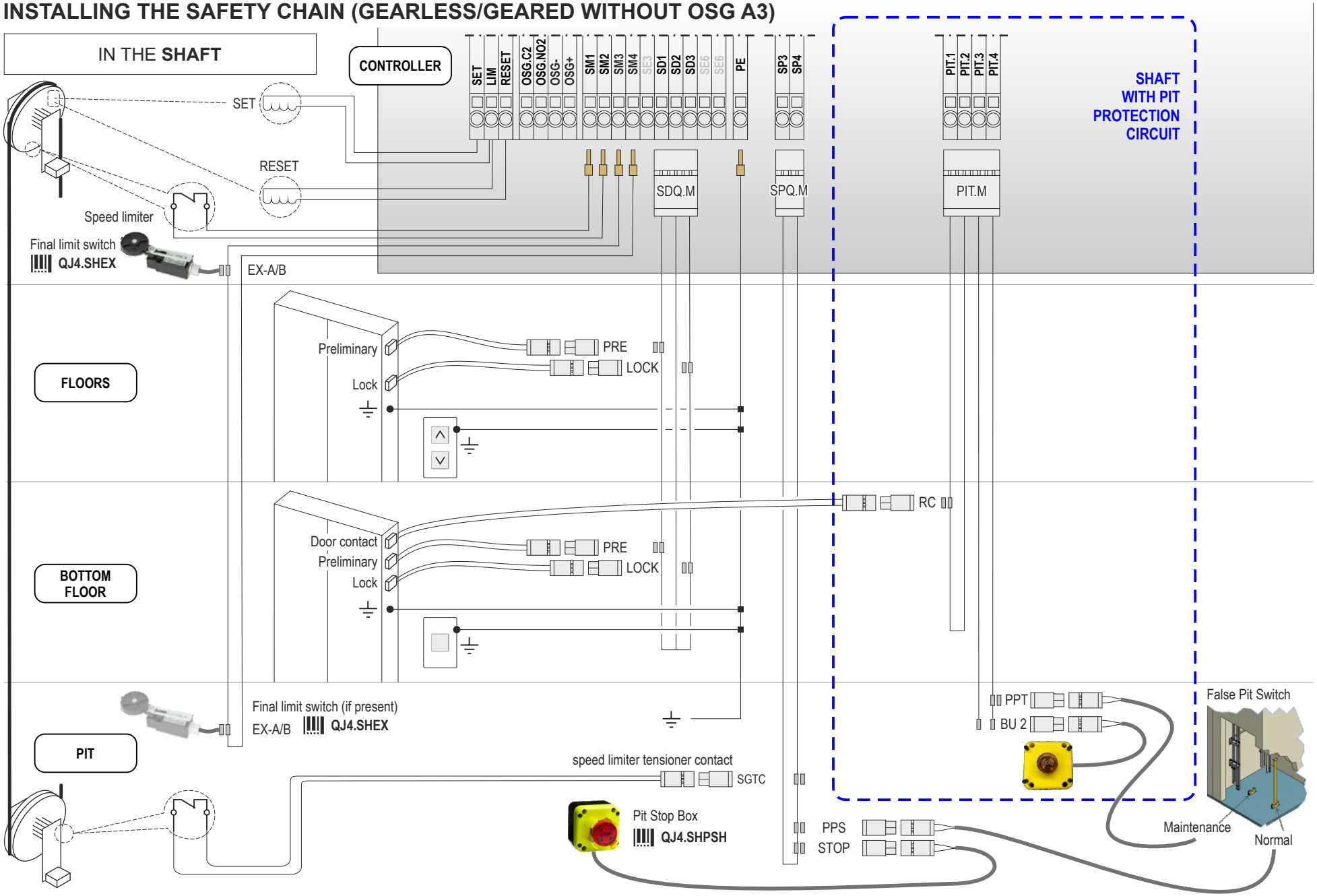

CONNECTING THE ELECTROMECHANICAL LOCK

ACTIVATION BY SLIDING CONTACT

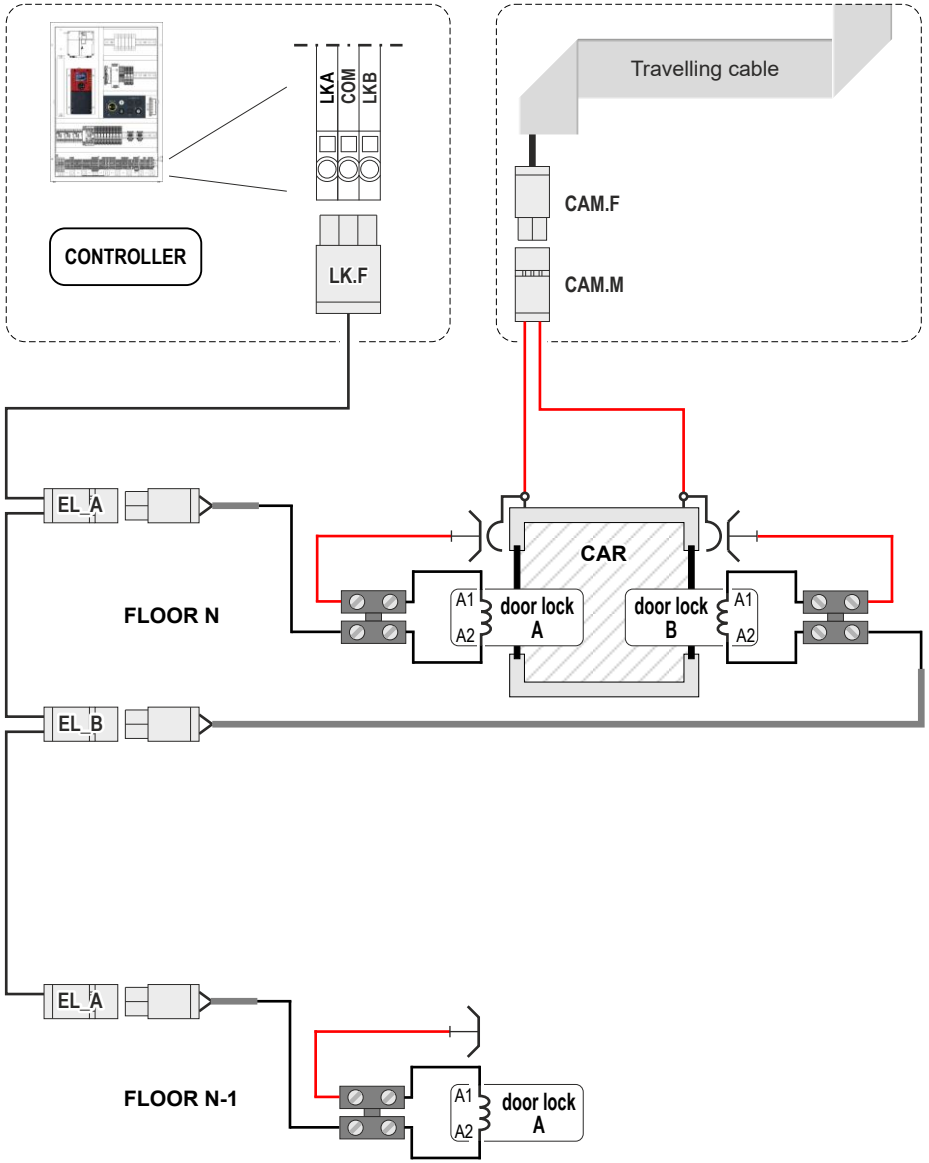

ACTIVATION BY REVERSING SWITCH

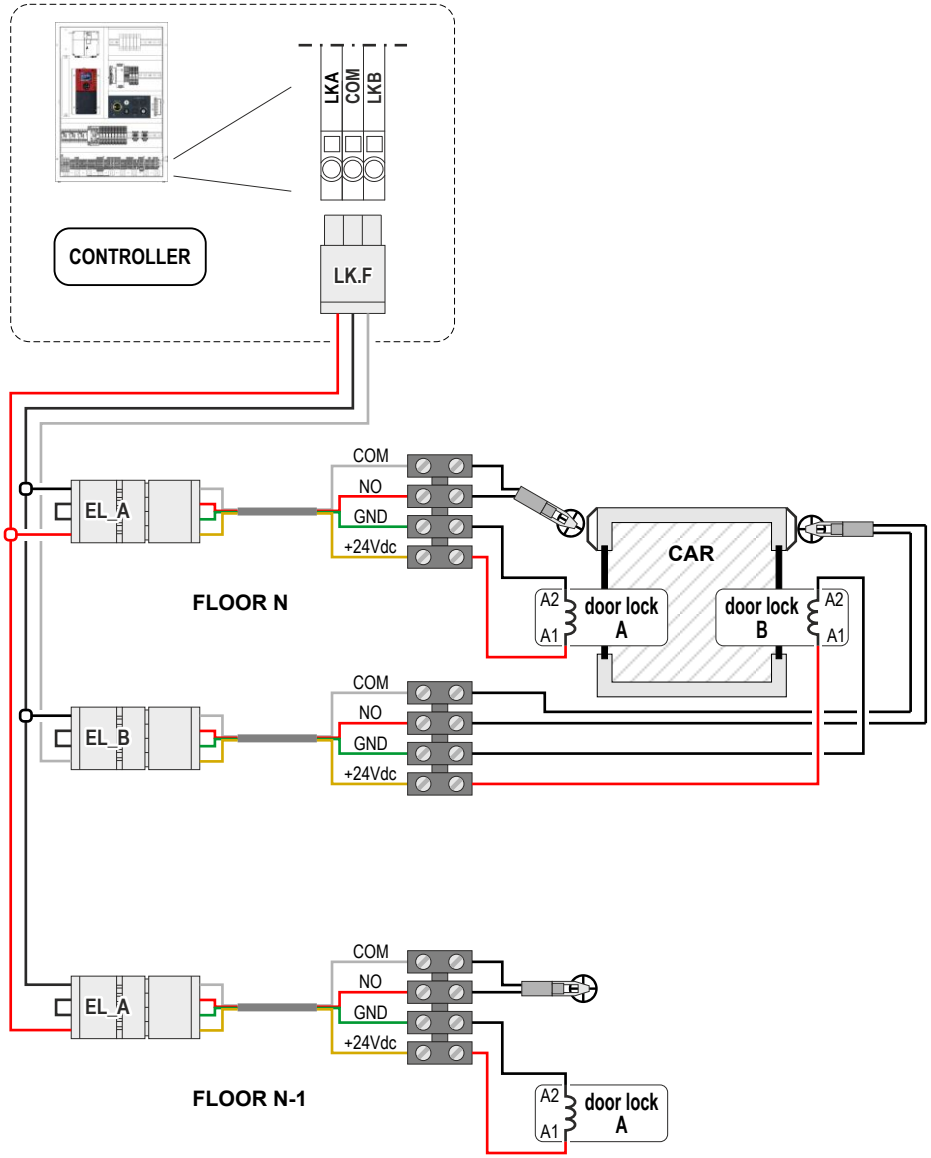

CONNECTING CAR DOORS OPERATOR

AUTOMATIC DOORS

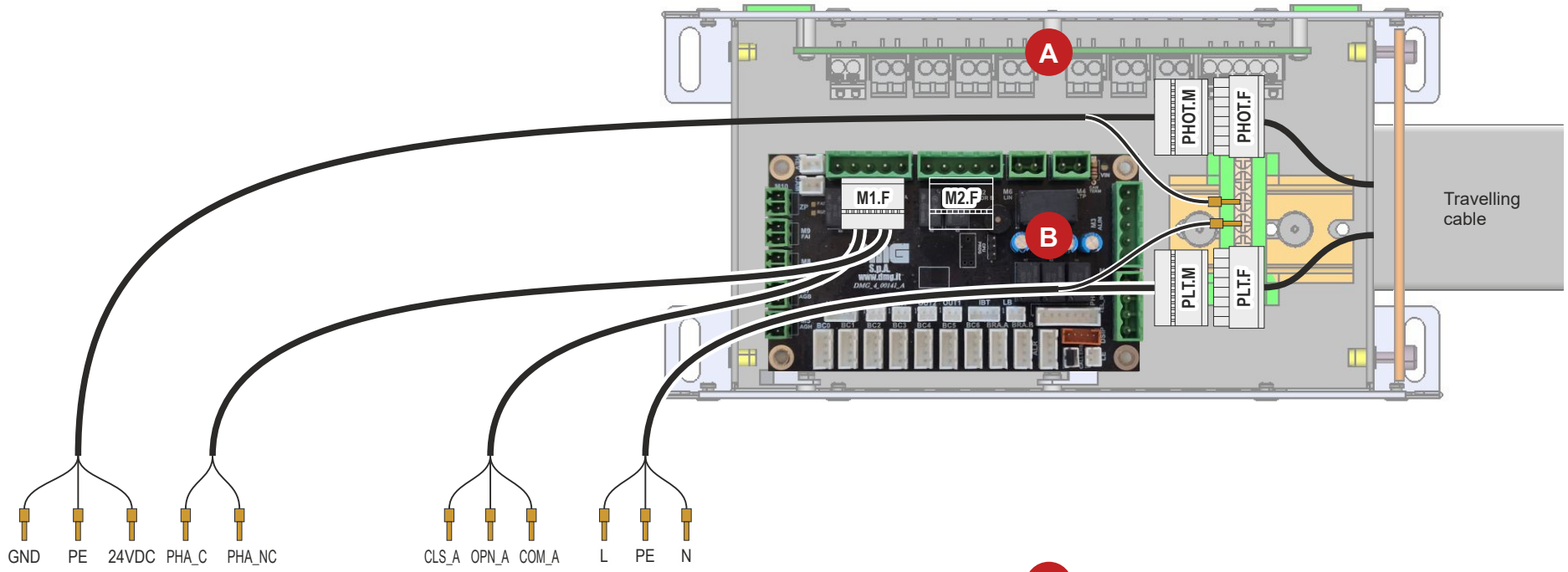

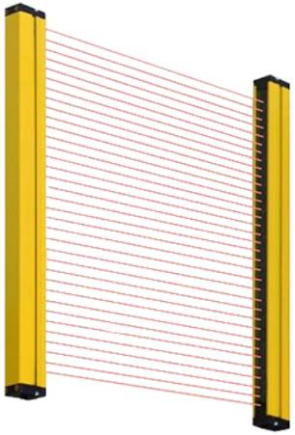

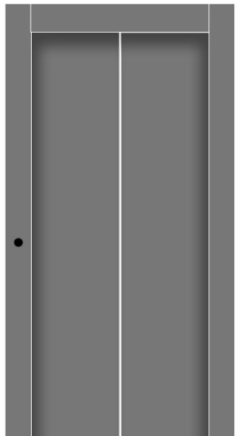

A Car dispatching board - 7-SEC

B Car dispatching board - CALLS

M2.F 2nd access

PRISMA AUTOMATIC

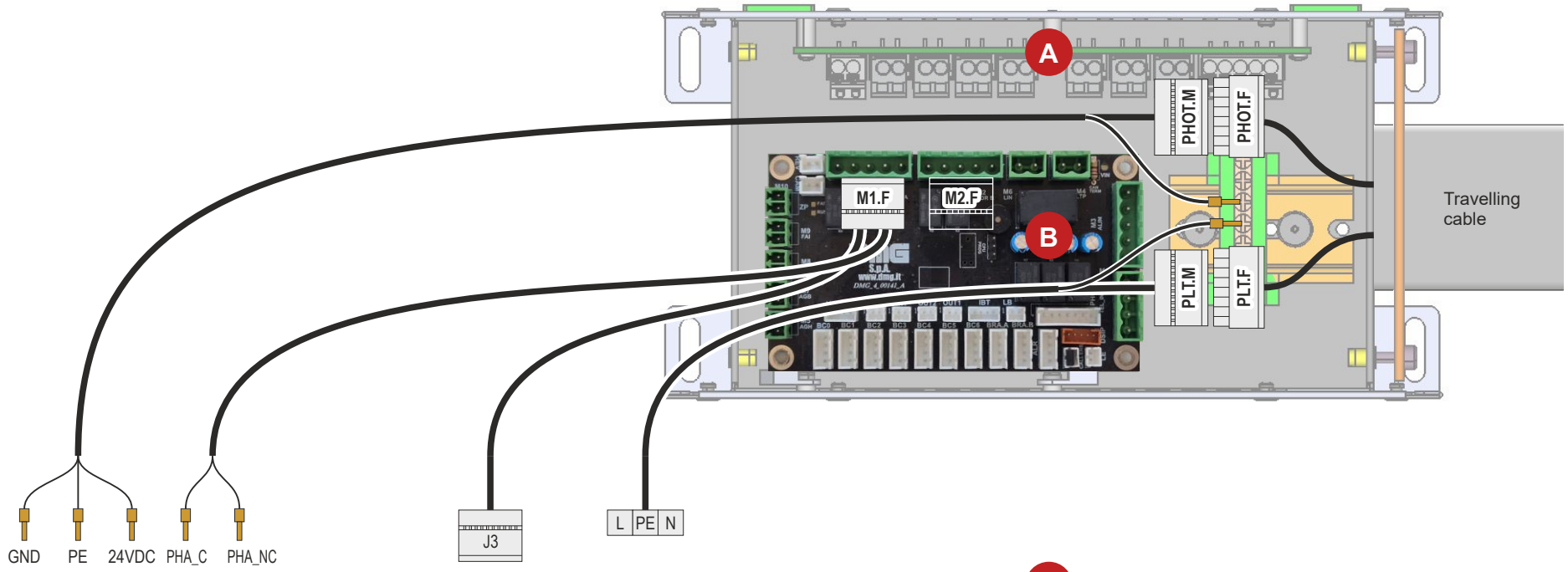

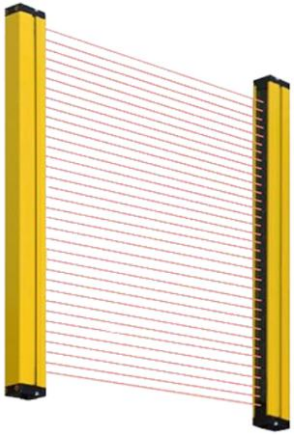

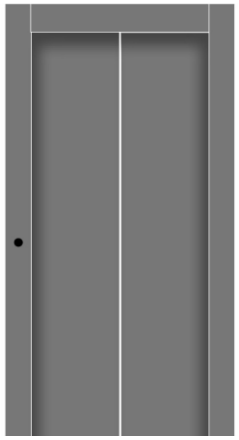

A Car dispatching board - 7-SEC

B Car dispatching board - CALLS

M2.F 2nd access

FERMATOR DC+ 24V AUTOMATIC

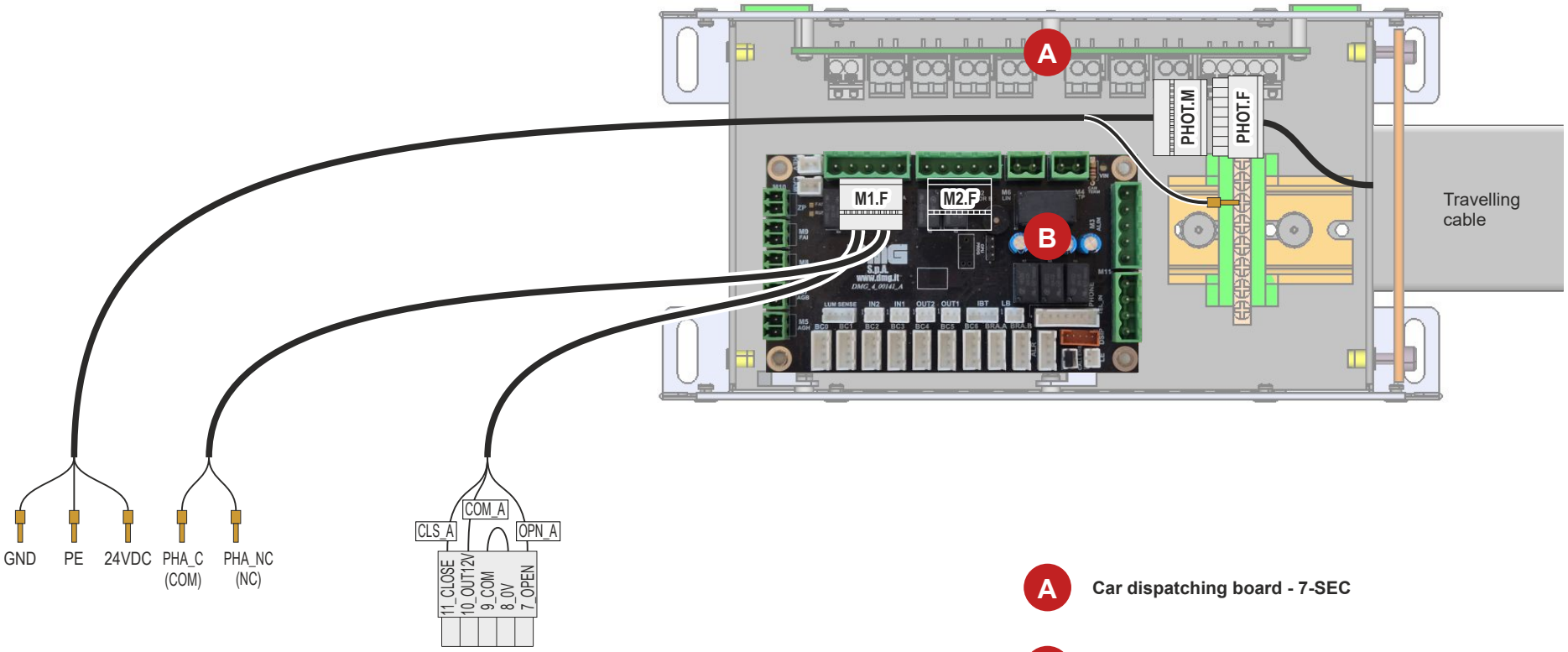

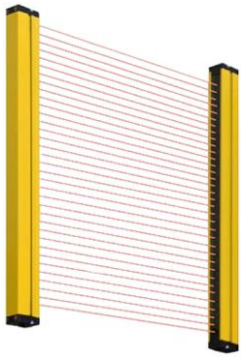

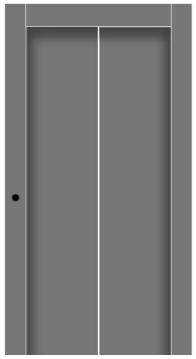

A Car dispatching board - 7-SEC

B Car dispatching board - CALLS

M2.F 2nd access

FERMATOR VF5+ AUTOMATIC

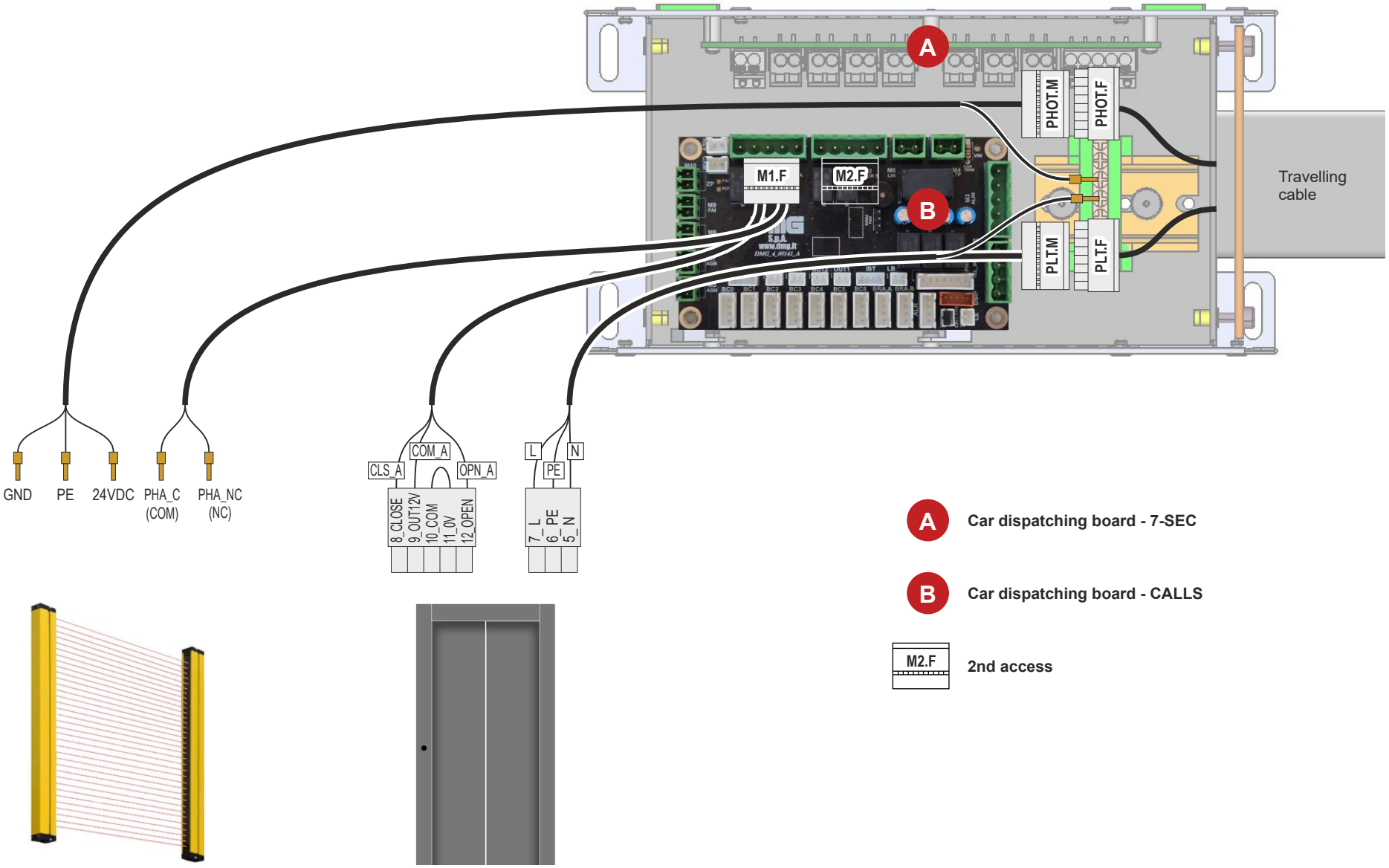

A Car dispatching board - 7-SEC

B Car dispatching board - CALLS

M2.F 2nd access

CONNECTING LIGHT BARRIERS (NO CAR DOORS)

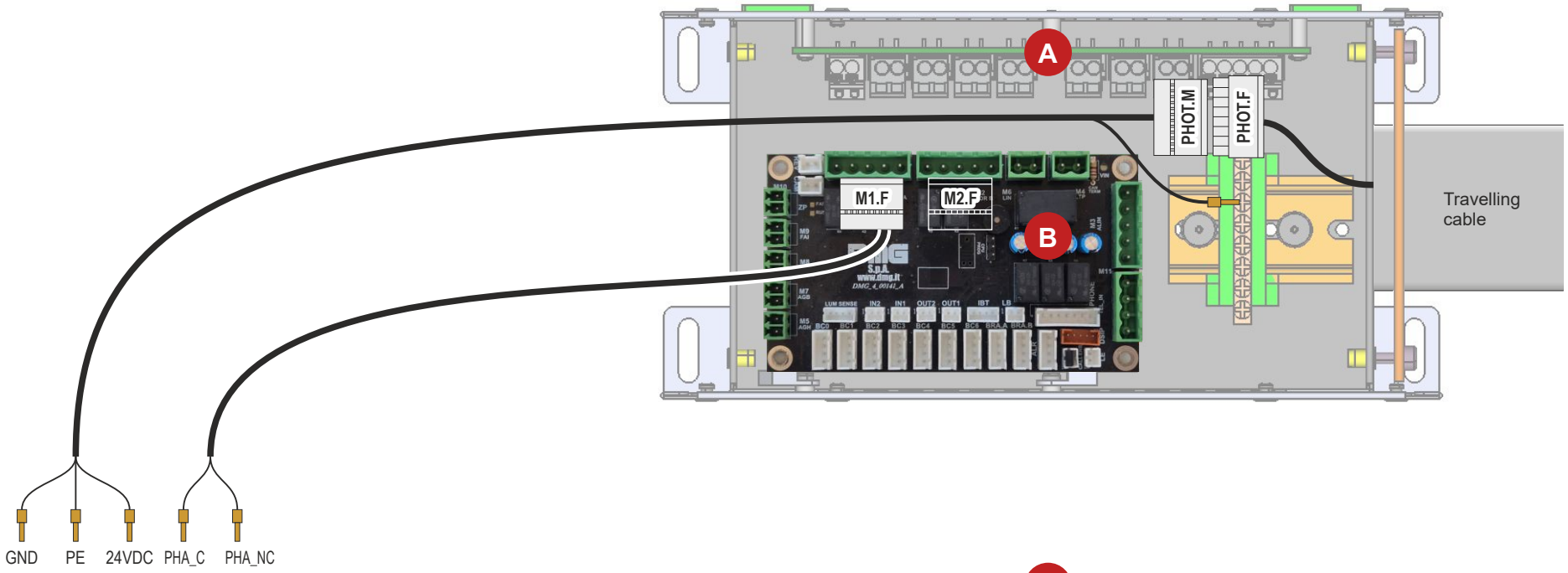

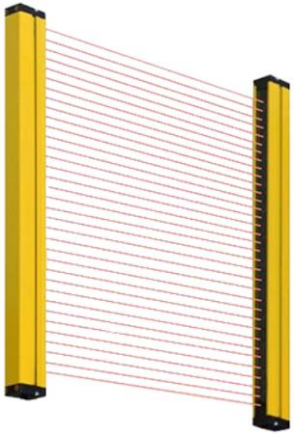

Light Barriers
QJ4.EDDW194.024

A Car dispatching board - 7-SEC

B Car dispatching board - CALLS

M2.F 2nd access

CONNECTING LANDING DOORS OPERATOR

MOTORIZED DOORS - FACE

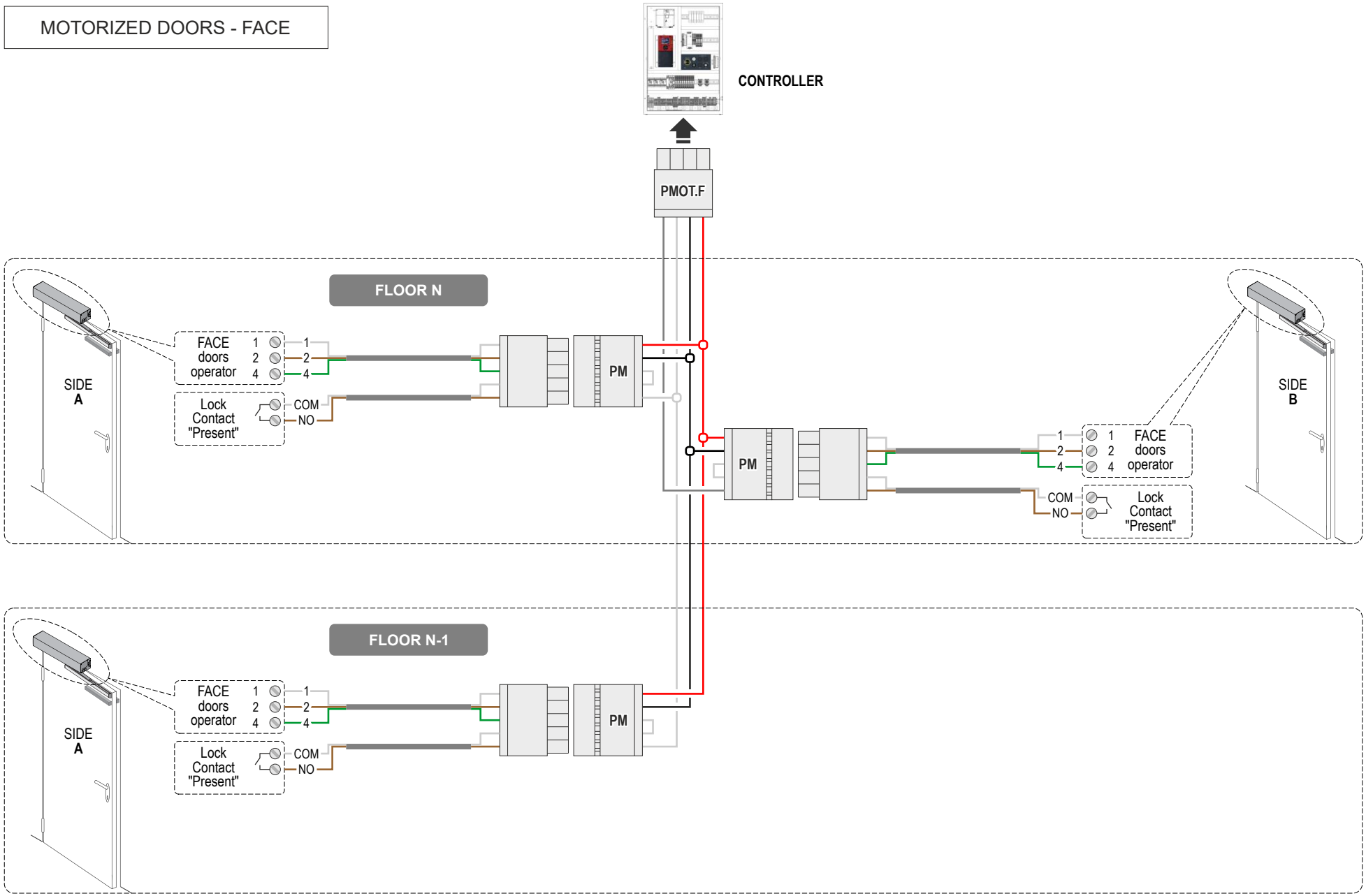

CAR POSITION READING SYSTEM

1 REFERENCE LAYOUT FOR MAGNETS AND MAGNETIC READERS

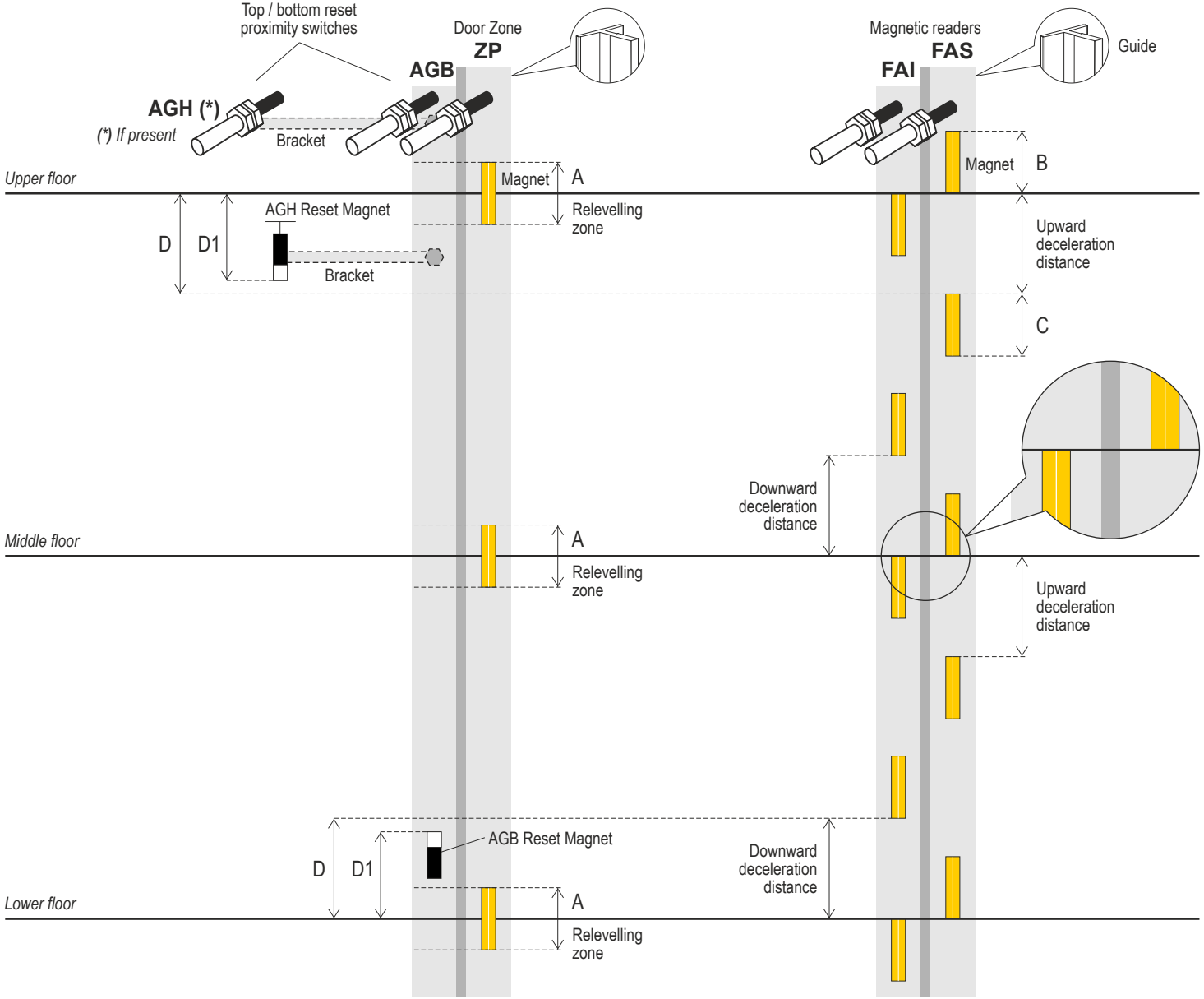

The deceleration magnets (C) can be shortened if necessary.

Lengths (mm)	Lengths (with fixed retiring cam)
A = 100	A = 100
B = 100	B = 100
C = 100	C = 100

Speed (m/s)	D (mm)	D1 (mm)
0,15	250	D-20
0,30	400	D-20

Installation KIT

QJ4.CTKIMP.H5

Magnetic Readers

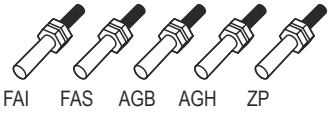

Reset Magnets

AGB
AGH

QJ4.SHCAL100

1 Magnet

QJ4.SHSAFCR

1 Bracket (optional)

QJ4.KSHCAL
(in case of manual doors)

4 x 150

1 x 200

2 INSTALLING MAGNETS AND MAGNETIC READERS

MAGNETIC READERS POSITIONING SYSTEM

FAI / FAS

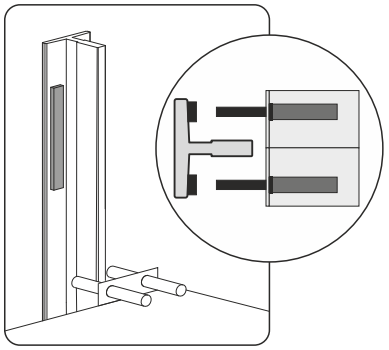

QJ4.CTKIMP.H5

+

QJ4.SHCAL100
4 magnets for the middle floors
2 magnets for the upper floor
2 magnets for the lower floor

or

QJ4.KSHCAL ***(in case of manual doors)***
4 magnets 150mm for each floors

TOP / BOTTOM RESET PROXIMITY SWITCHES

AGB / AGH

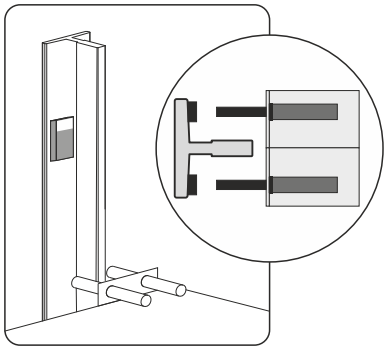

QJ4.CTKIMP.H5

DOOR ZONE / RELEVELLING

ZP

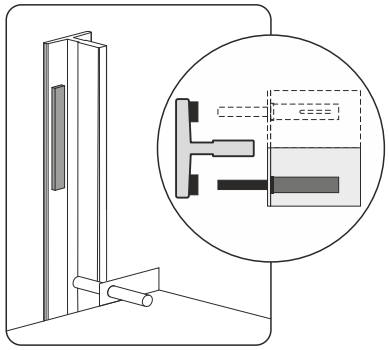

QJ4.CTKIMP.H5

+

QJ4.SHCAL100
1 magnet for each floors

or

QJ4.KSHCAL ***(in case of manual doors)***
1 magnet 200mm for each floors

3 CONNECTING THE MAGNETIC READERS

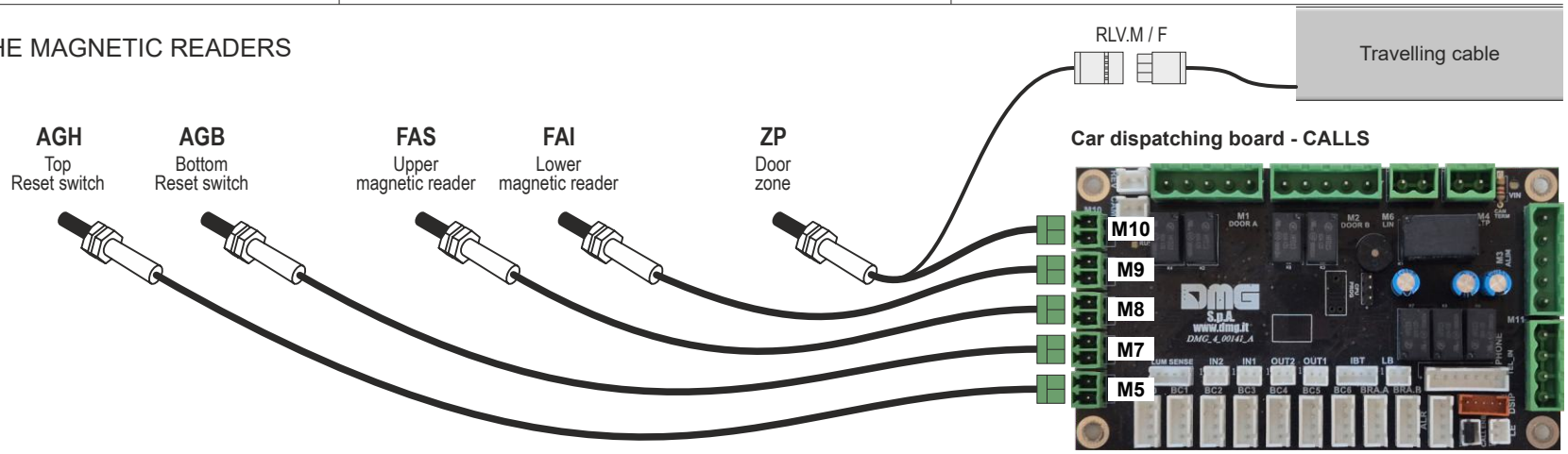

CONNECTING THE CAR ILLUMINATION

12V DC

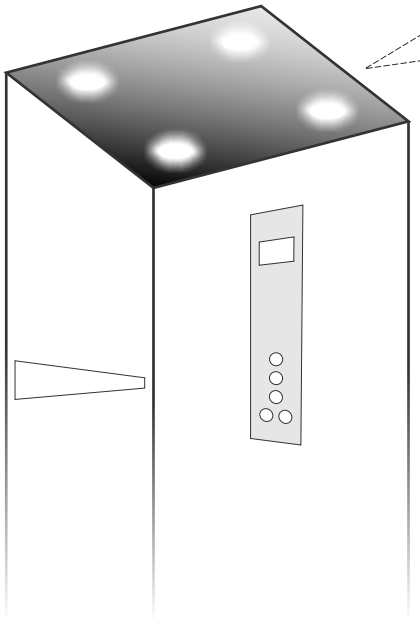

Lamp Socket GU5.3 (4x)

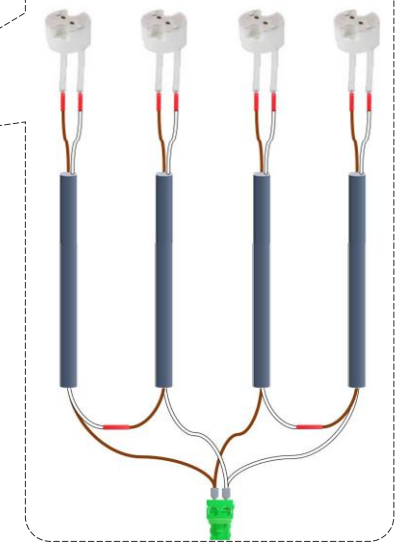

QJ4.CTKLC12

Lamp Socket GU4 (4x)

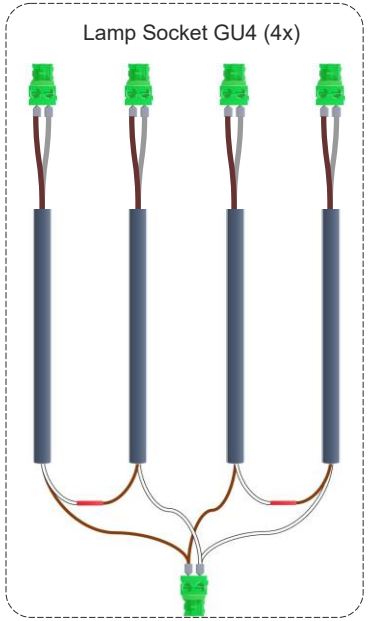

QJ4.CTKLC12W

Kit with screw terminals

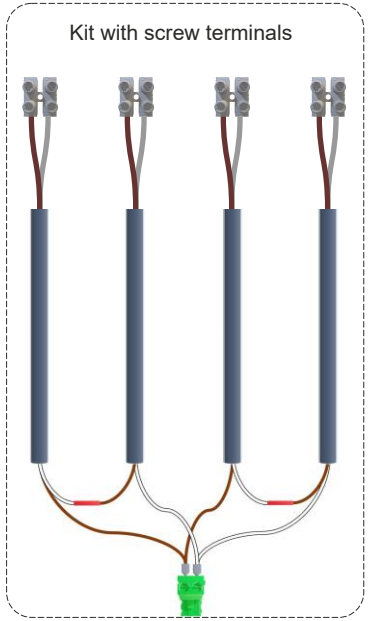

QJ4.CTKLC12F

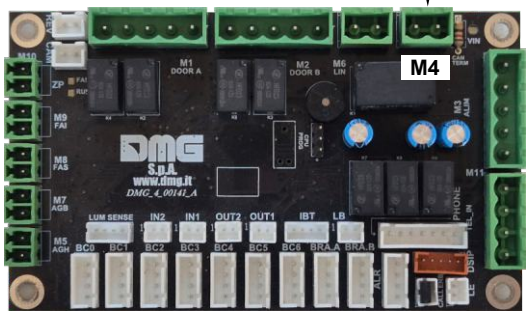

Car dispatching board - CALLS

24V DC

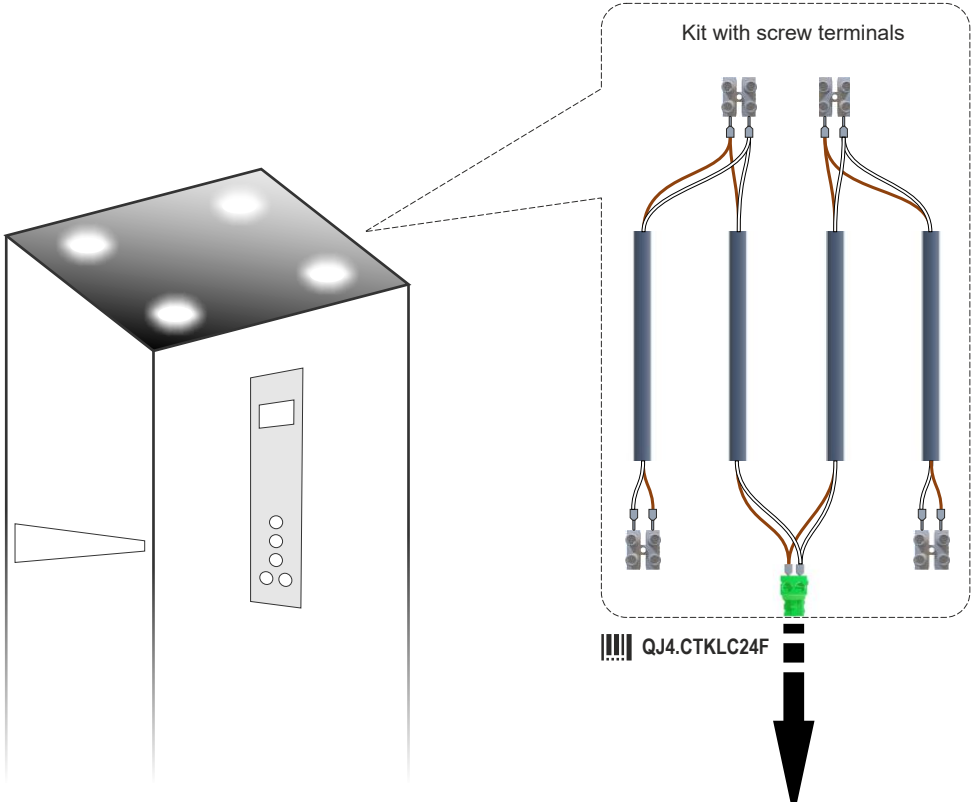

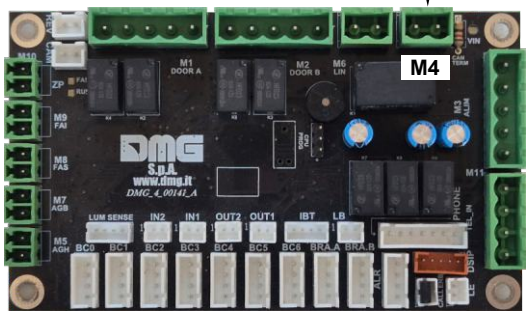

Car dispatching board - CALLS

230V AC

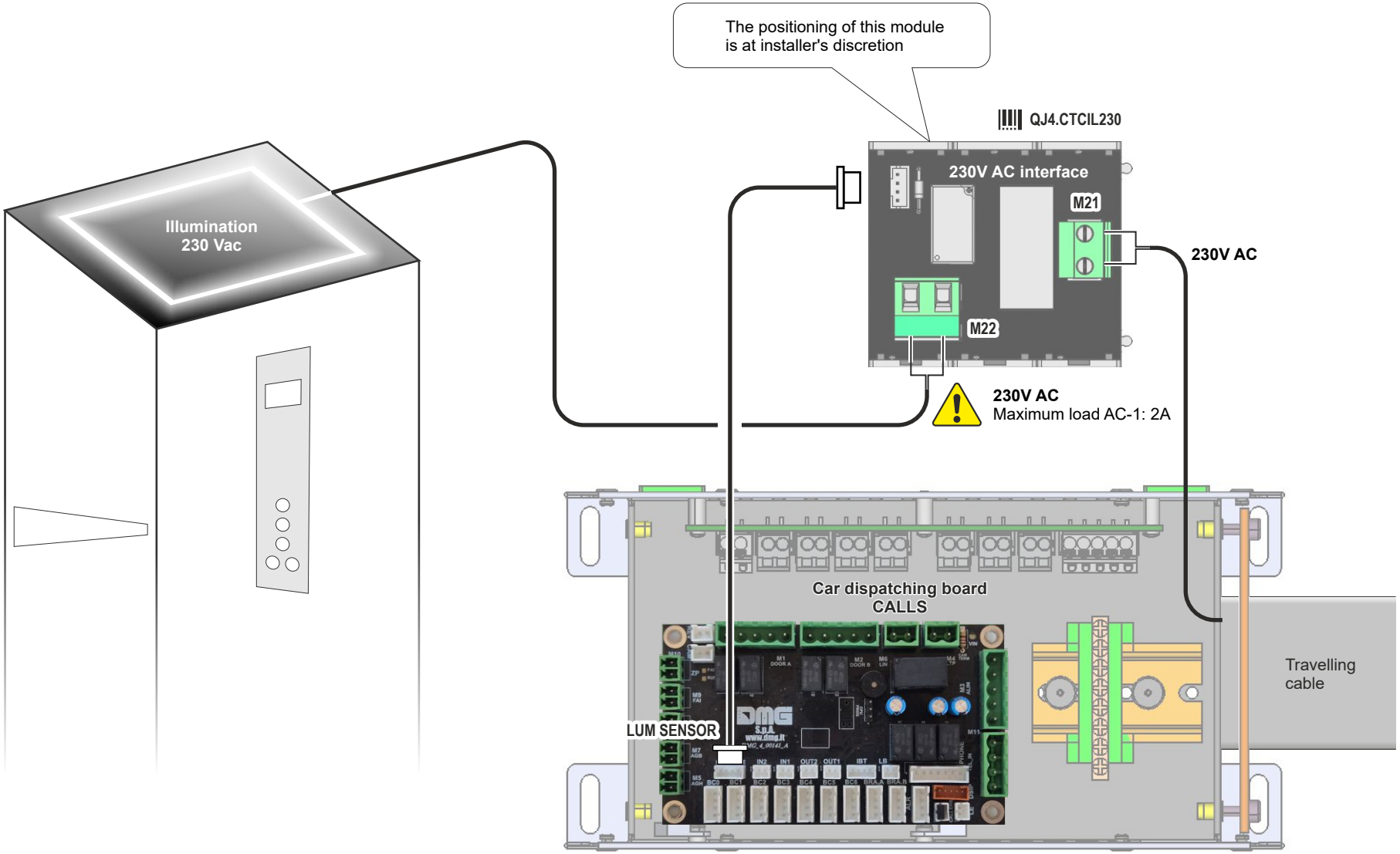
The positioning of this module
is at installer's discretion
QJ4.CTCIL230
230V AC interface
M21
M22
230V AC
230V AC
Maximum load AC-1: 2A
Illumination
230 Vac
Car dispatching board
CALLS
LUM SENSOR
Travelling
cable

CONNECTING THE INSPECTION SWITCH

Manual doors

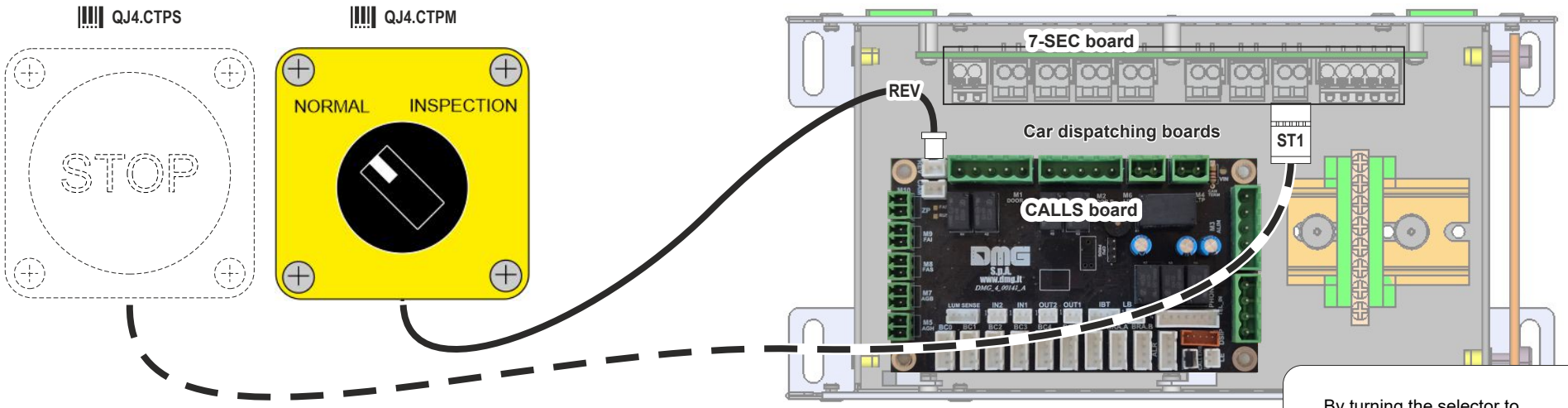

By turning the selector to "INSPECTION", the lift enters into the inspection mode. Some of the safeties are by-passed and it is possible to move the cabin using the first two car call buttons.

Automatic doors

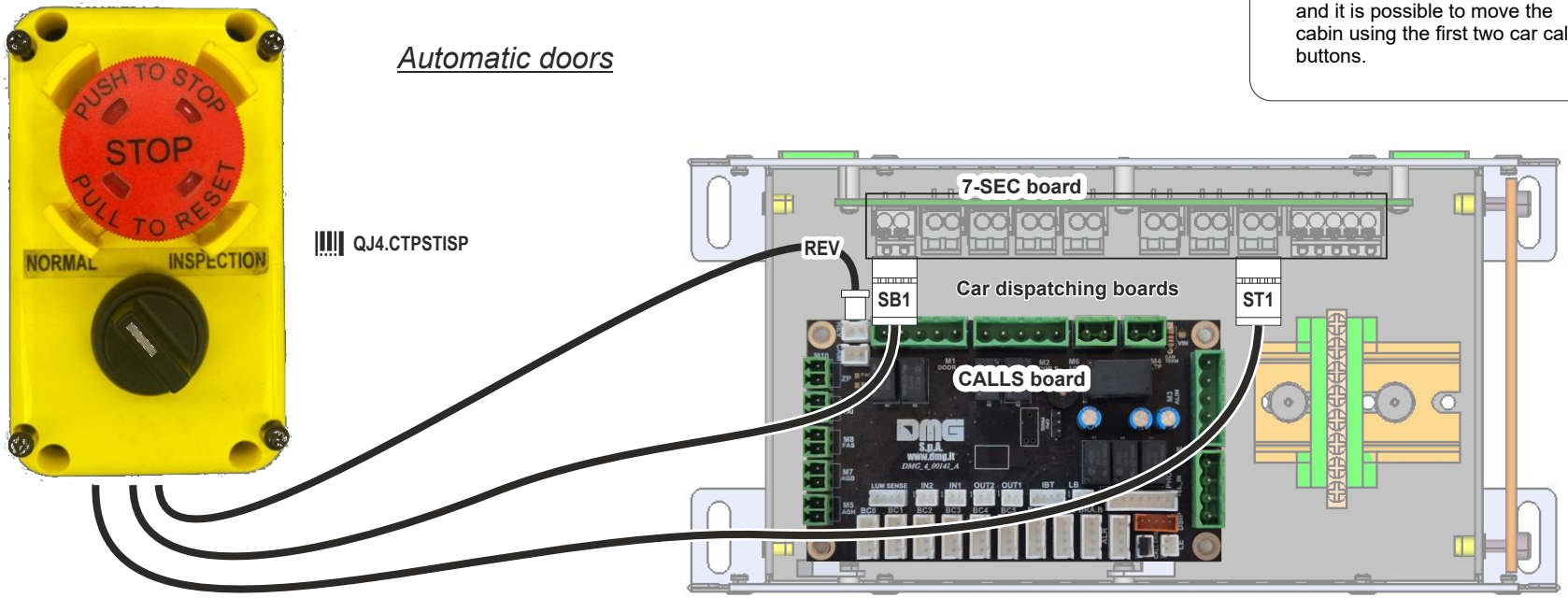

INSTALLING THE CAR PANEL

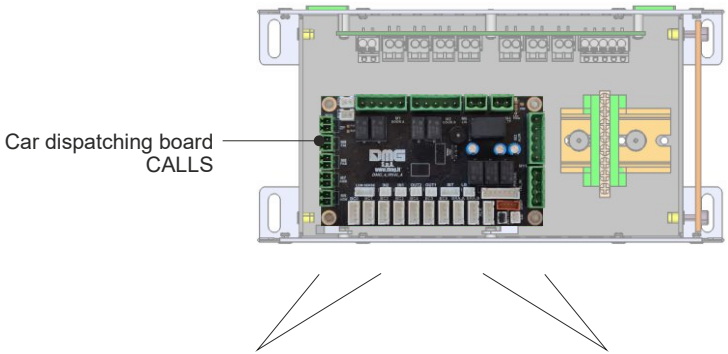

DISPLAY & INDICATORS

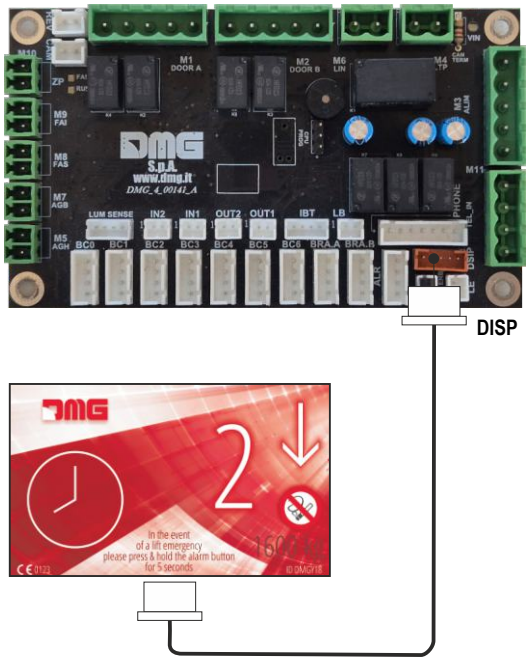

CALL / SERVICE BUTTONS

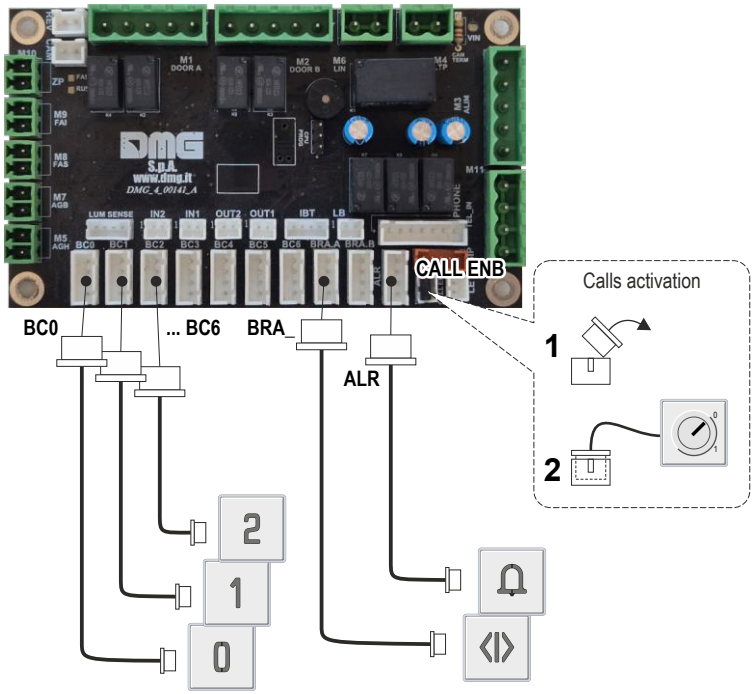

INSTALLING THE FLOOR PANELS

Floor serial interface (BDU)

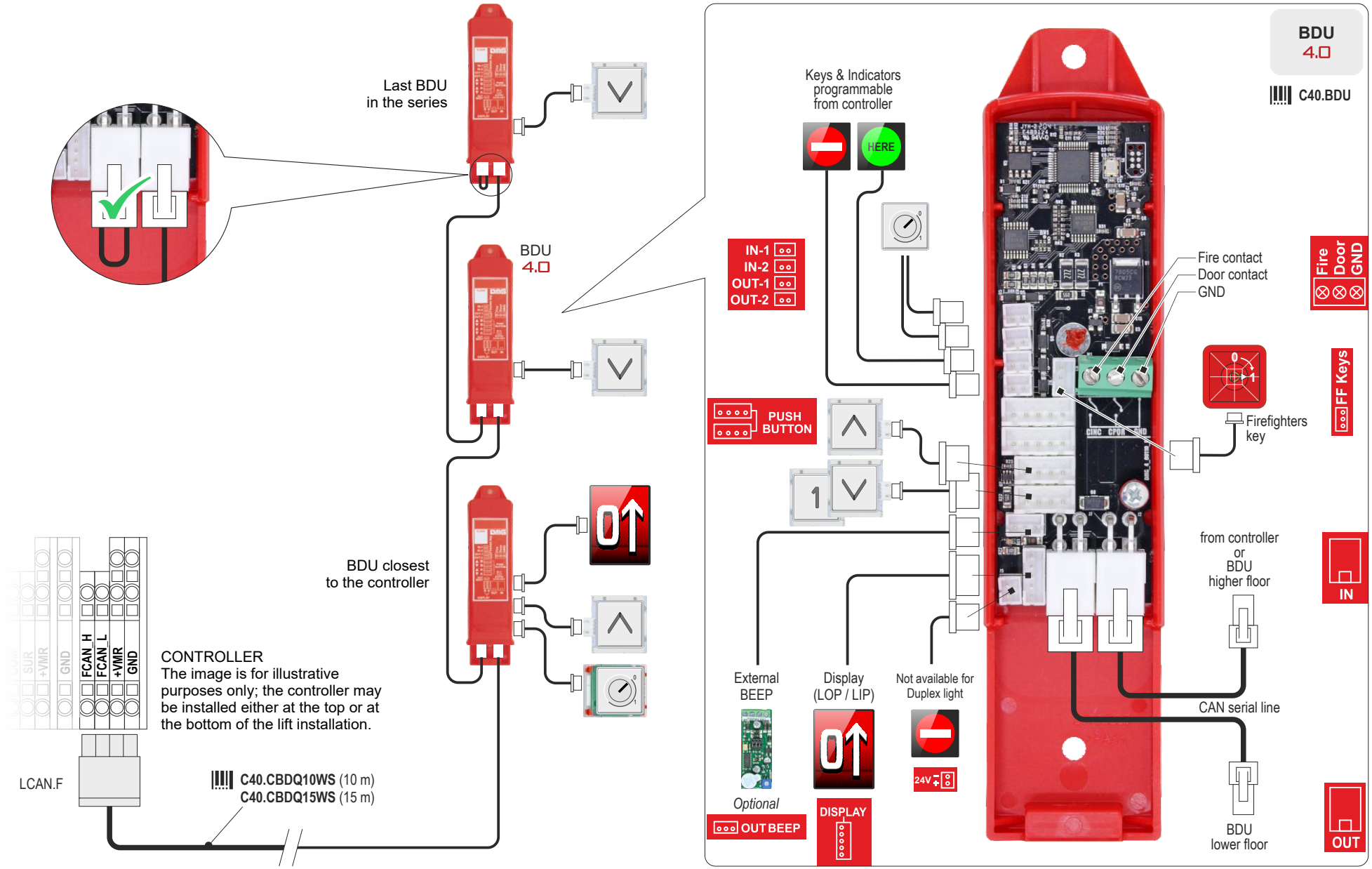

BDU PROGRAMMING

INPUTS

IN-1
IN-2

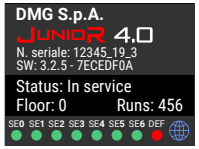

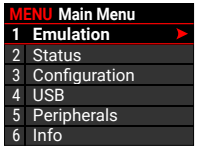

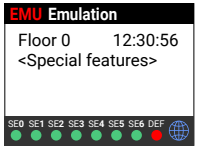

IN-1
LOP priority
Pushbutton Code
IN-2
Baggage *(if the parameter <Signals> - Ship Functions of the controller is active)*

Default settings
IN-1 - Call disabling (active input closed).
IN-2 - Key input out of service - The system does not accept new calls, cancels the calls at the floors, and completes the calls already registered in the car, then parks at the programmed floor (Menu <Special features> - Out of service floor) standing with doors closed.

OUTPUTS

OUT-1
OUT-2

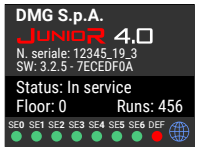

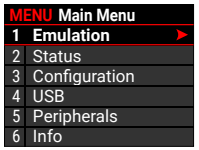

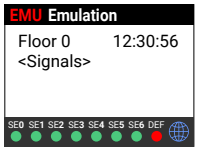

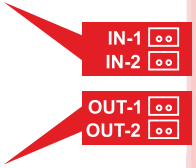

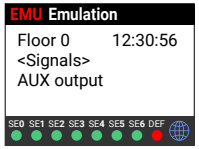

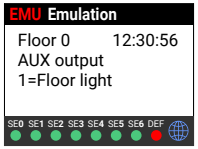

Do not modify

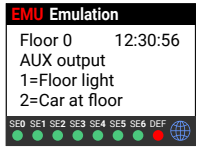

Do not modify

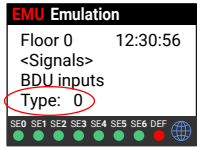

	OUT 1	OUT 2
Type 0	HERE	⛔
Type 1	▲	▼
Type 2	HERE	COMING
Type 3	HERE	3 wires display

choose a setting for each floor

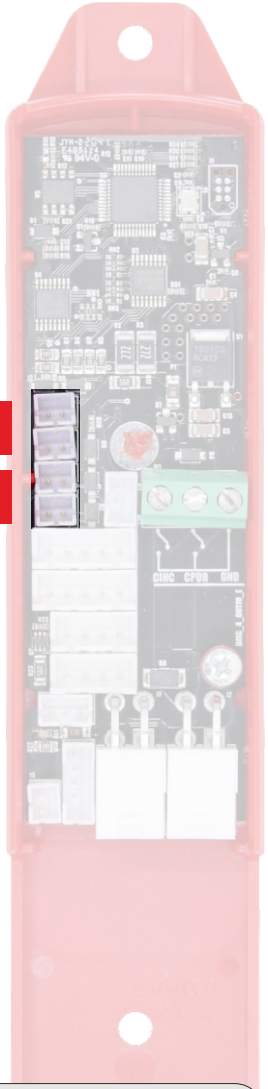

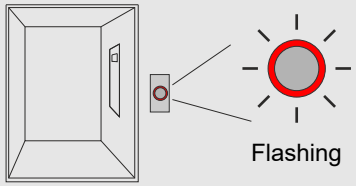

BDU ADDRESSING

The BDUs are pre-addressed at the factory;
if they are not (e.g.: after replacement), the floor call button will start flashing.
To address them, follow the BDU addressing procedure described on the DIDO page.

DIDO https://dido.dmg.it/knowledge-base/pitagora-floor-connections/

INSTALLING THE EMERGENCY PHONE

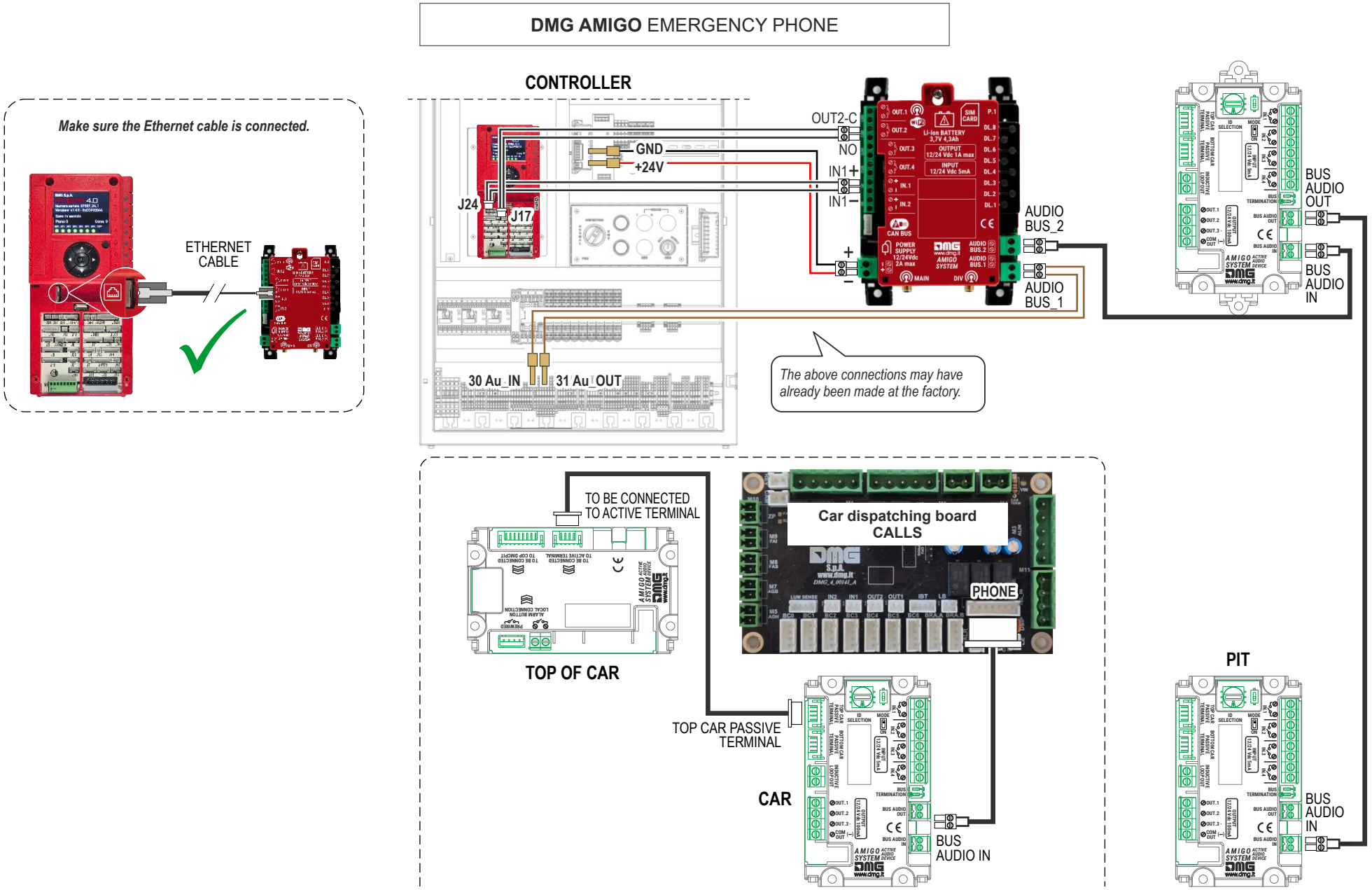

3rd-PARTY EMERGENCY PHONE

This configuration is available ONLY when using the 32-poles travelling cable, not with the 28-poles travelling cable.

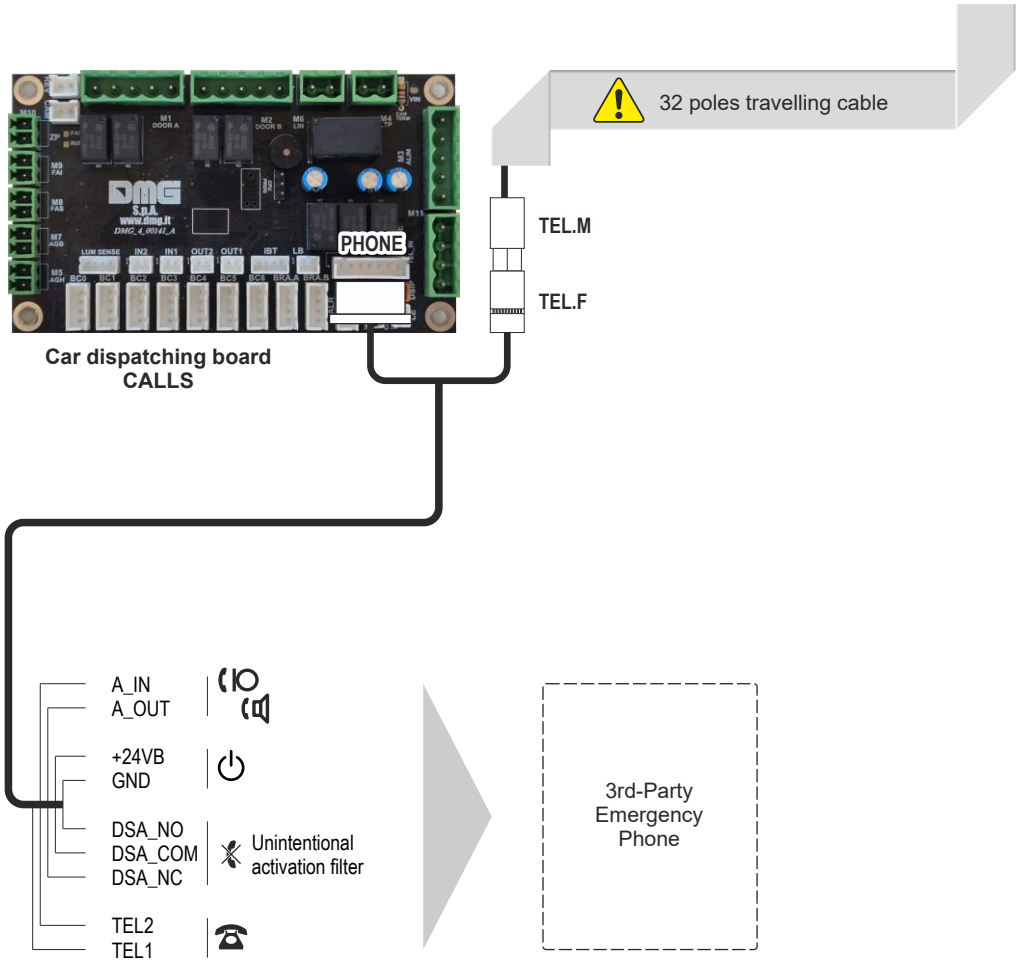

INSTALLING THE LLEC7 LIFT LOAD ELECTRONIC CONTROL DEVICE

DMG LLEC7 LIFT LOAD ELECTRONIC CONTROL

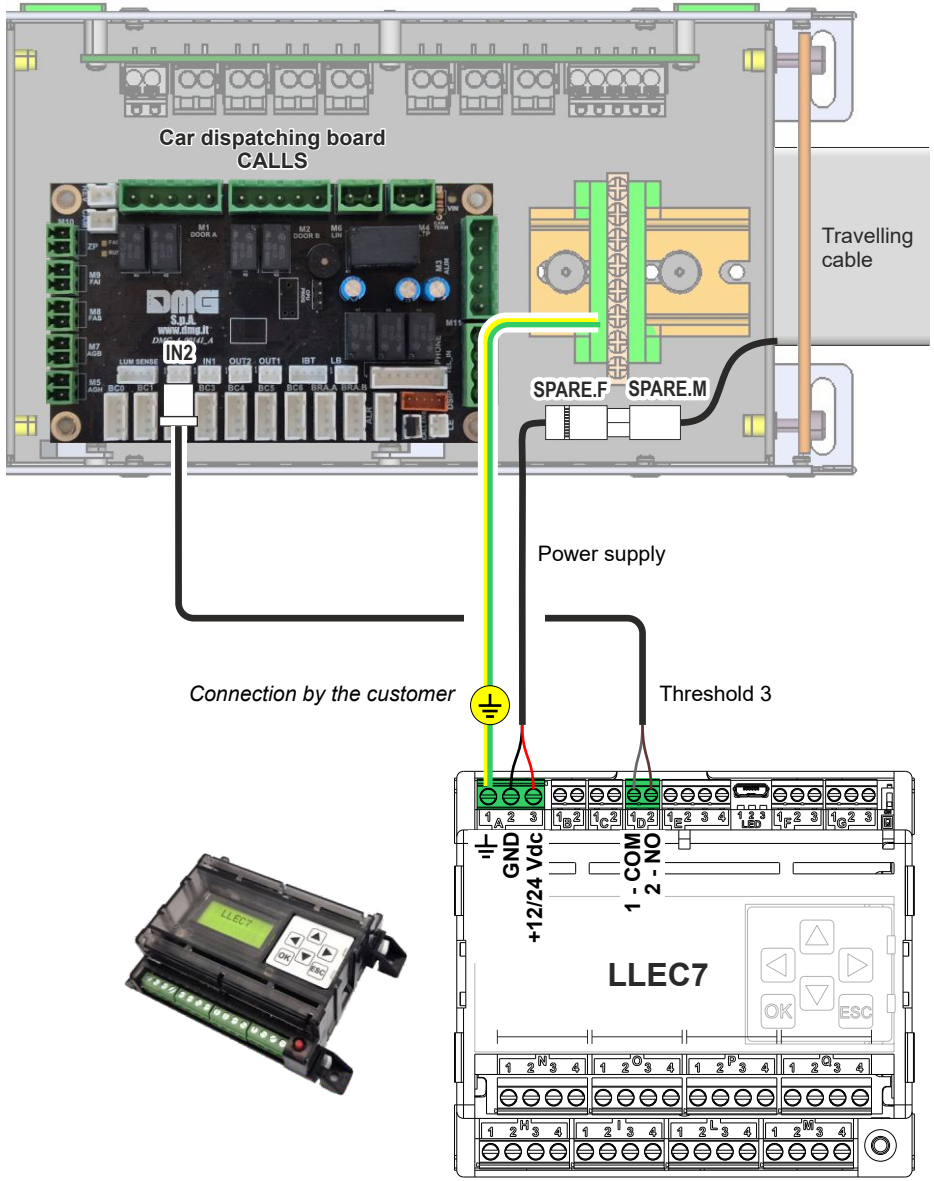

3rd-PARTY LIFT LOAD ELECTRONIC CONTROL

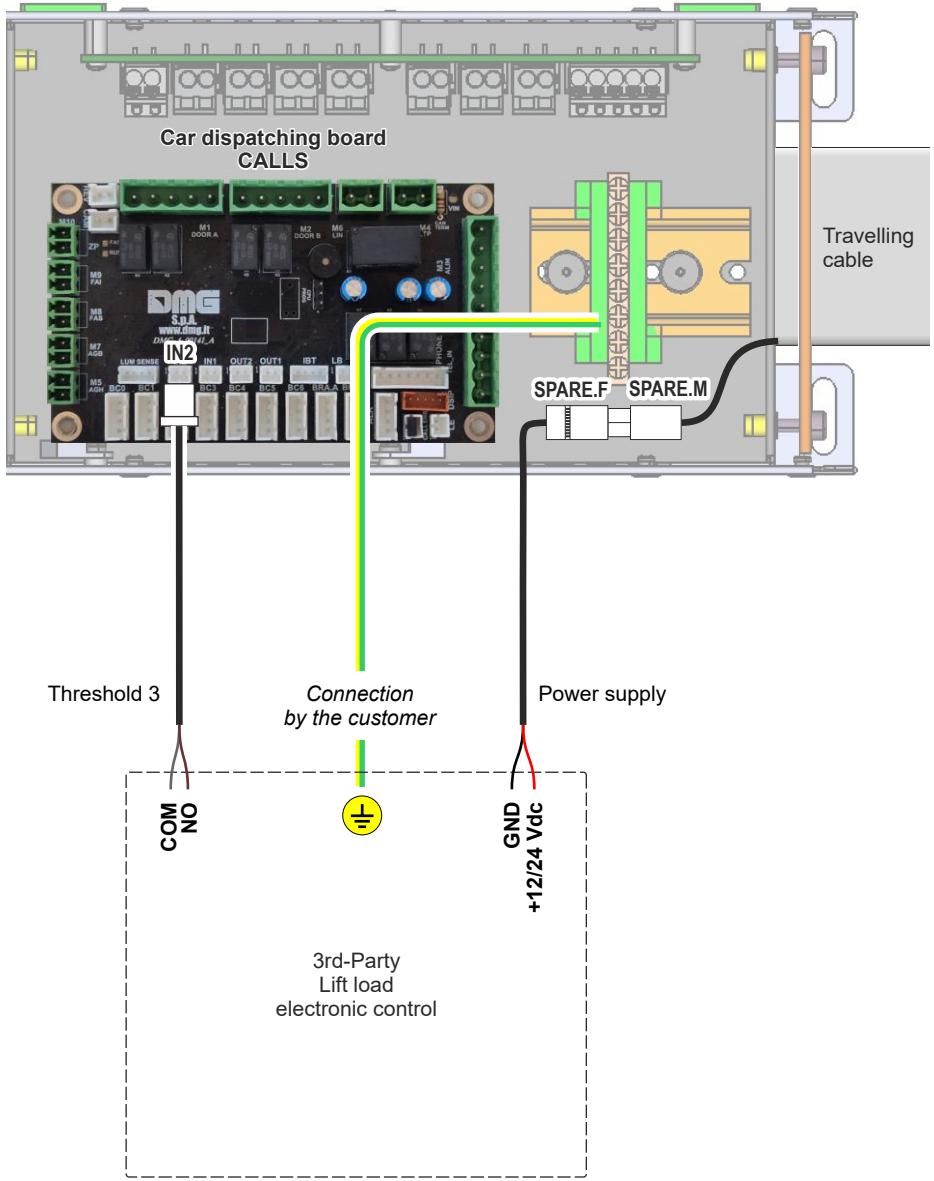

PHASE 2 - NORMAL MODE & SYSTEM ADJUSTMENTS

SWITCH TO NORMAL SERVICE MODE

1

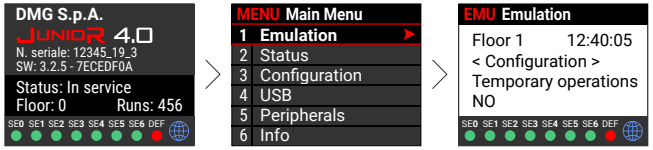

2 ***Disconnect the temporary operations box***

3

LED 3 turns green

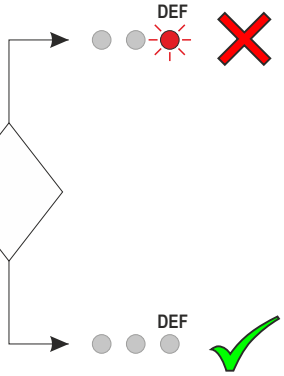

LIFT BLOCKED BEYOND FINAL LIMITS
Possible wrong positioning of positioning sensors / magnets.
→ *See pages 20 and 21 (Car position reading system) and repeat steps (1) to (3)*

LIFT NOT WORKING
Check the error code in the troubleshooting section.
→ *See page 39 (Basic troubleshooting)*
→ RSP fault

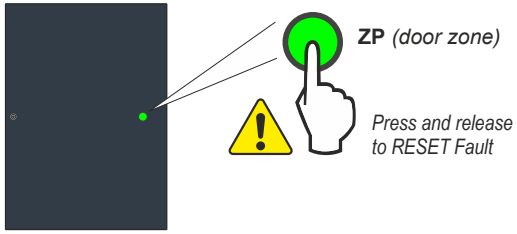

LIFT MOVES TO THE BOTTOM FLOOR

LIFT IN
NORMAL SERVICE MODE

4 ***Set the stopping accuracy (Fine tuning) at each floor***
See next page

5 ***Perform final system test***
(check all lift functions)

ADJUSTING FLOOR STOPPING ACCURACY

1. Read the gap between floor level and car floor edge.
2. Move (P) magnets in the shaft to adjust the stopping position.
3. Move (D) magnets to adjust the deceleration distance.

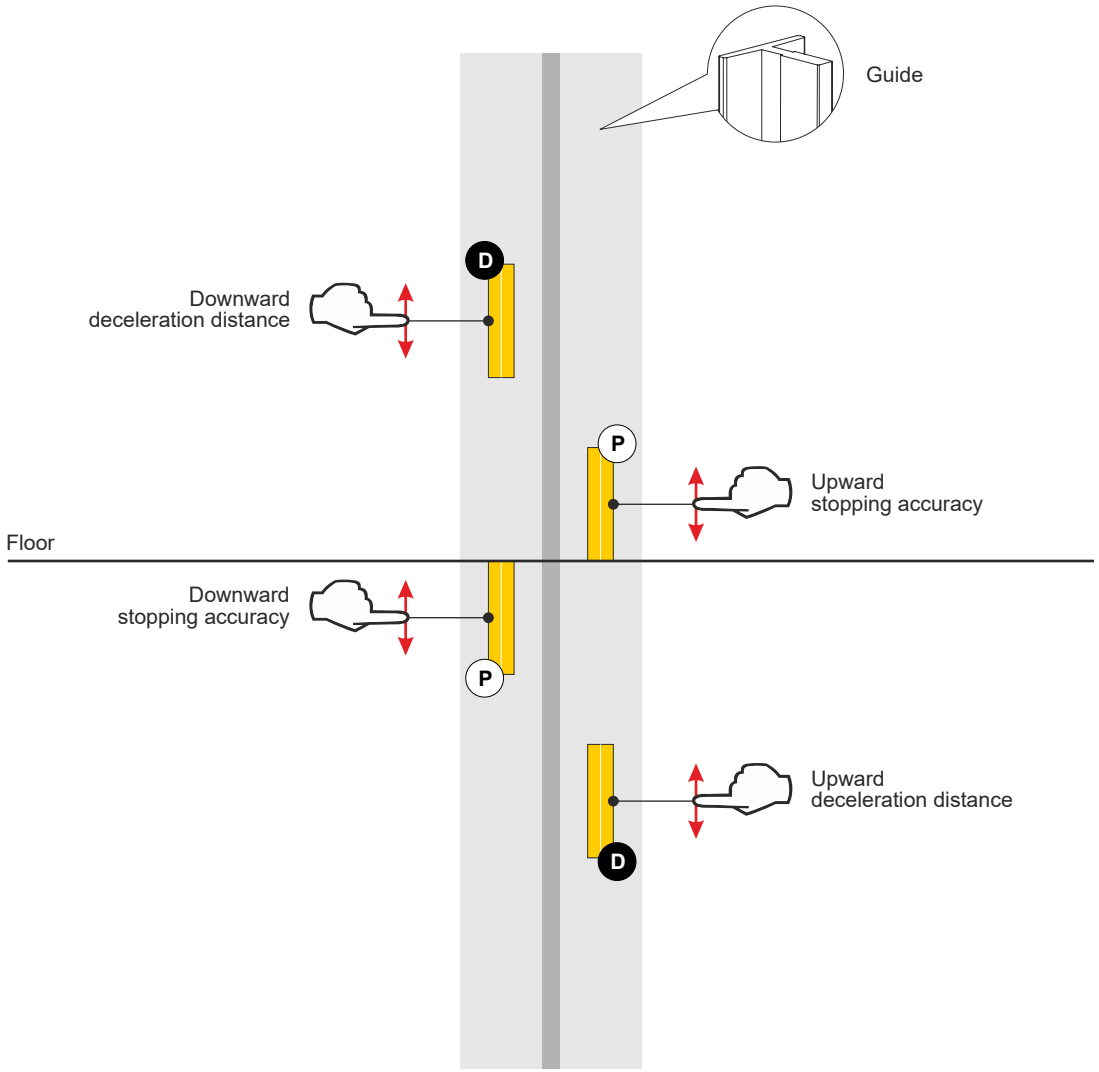

CONNECTIVITY (FUSION APP)

FUSION Dashboard

Before even seeing how to connect and interact with the installed device, you need to access the Fusion Dashboard cloud software.
https://fusiondashboard.dmg.it/

DIDO

On the Fusion Dashboard cloud, register the company, buildings, devices and operational technicians, as indicated in the video tutorials on the DMG DIDO site on the "Connectivity and Fusion app" page.
https://dido.dmg.it/knowledge-base/connectivity-fusion-app/

Connection mode

W-Fi connectivity to smartphones comes as a standard for all Junior 4.0 controllers, at no extra costs. To enable connectivity and benefits from the advantage of real-time monitoring of the lift, two solutions are available:

LOCAL connections

The local connection carry out on the installation site of the Pitagora system, via Wi-Fi HotSpot located in the TOC board and in the Junior 4.0.
Before connecting locally to the TOC and Playpad 4.0 devices via the Fusion app (described below), it is necessary to check that the Wi-Fi signal is enabled on these 2 devices.

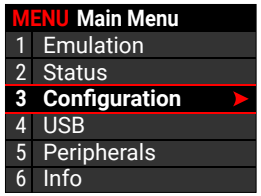

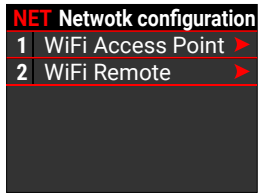

Enable

REMOTE connections

The remote connection allows you to access devices connected through the Amigo System router.
Instructions for installing the Amigo System:
https://dido.dmg.it/knowledge-base/amigosystem/

DIDO

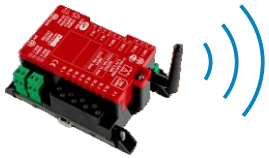

Amigo System

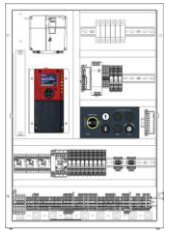

Junior 4.0

Lift controller management via the Fusion app

Fusion is the application (IOS / Android) created by DMG for the direct management of compatible installed devices.

Download the Fusion app using the QR code on the side.

iOS

Android

1

Start the FUSION app and login when the smartphone is still connected to internet.

You can reach devices locally without logging in (Select "Local Connection").

2

Select the type of device to manage.

3

Local connection

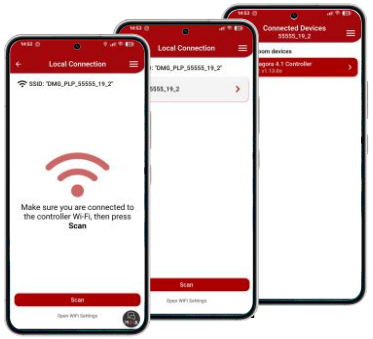

Make sure you are connected to the controller's Wi-Fi network:
In the network settings of the smartphone, search and select the Wi-Fi network of the device to connect to (Playpad / TOC):
- DMG_PLP_xxx > PLAYPAD
- DMG_TOC_xxx > TOC
The login credentials are provided by DMG together with the documentation supplied with the product.
Finally search for devices (press “Scan”) and select the device to manage.

WiFi PLAYPAD

WiFi SSID
DMG_PLP_11776_22_1

WiFi Key
x}yn$vZroe

WiFi TOC

WiFi SSID
DMG_TOC_11776_22_1

WiFi Key
glh:p2e&_:1

Remote connection

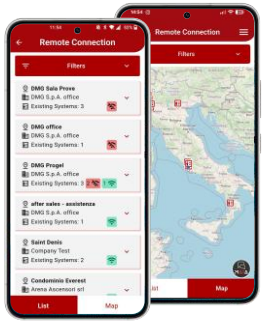

You can now choose the device to manage from either a device list or a device map.

4

✓

TEST AND MEASUREMENTS

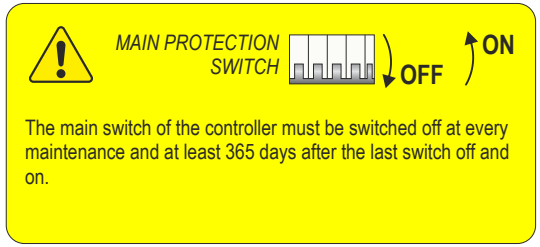

To access the TESTS AND MEASUREMENTS section on the Playpad, set the display as indicated.

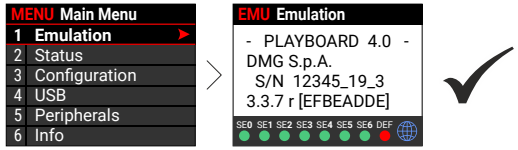

FINAL LIMIT SWITCH TEST

This test is only used to check the functionality and position of the final limit switch; this test does not check the behaviour of the car after leaving the final limit switch.

1

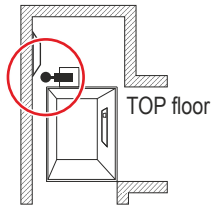

2

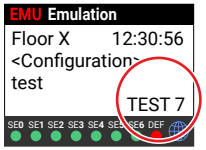

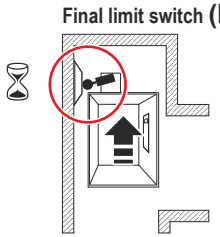

3

INSPECTION

4

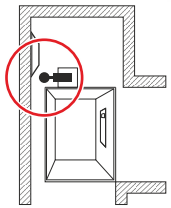

5

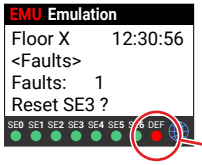

DEF

OK *(Reset Fault)*

6 Repeat 1 ÷ 5 but at the BOTTOM floor

RE-LEVELLING TEST

1

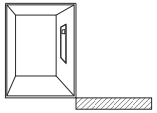

2

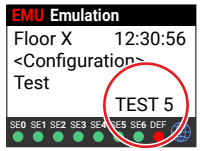

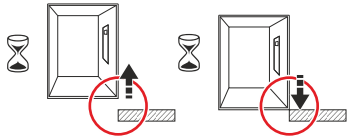

3

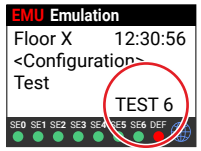

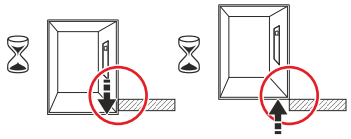

4 Repeat 1 ÷ 3 at every floor

BALANCING SYSTEM MEASUREMENT

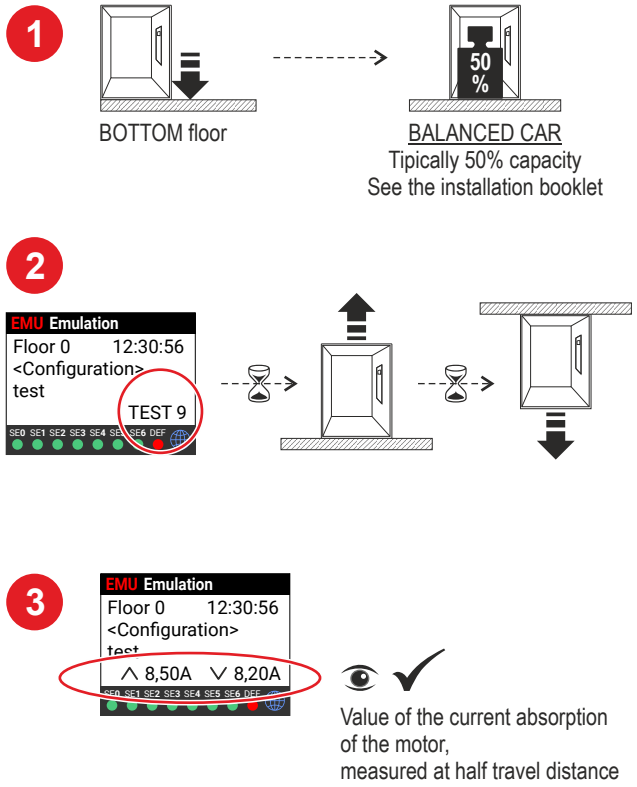

DYNAMIC BRAKE TEST

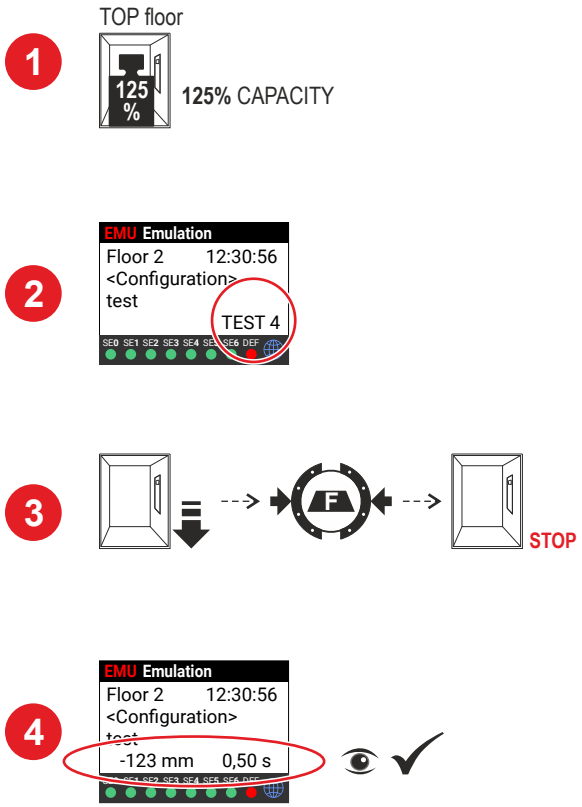

MOTOR RUN TIME TEST

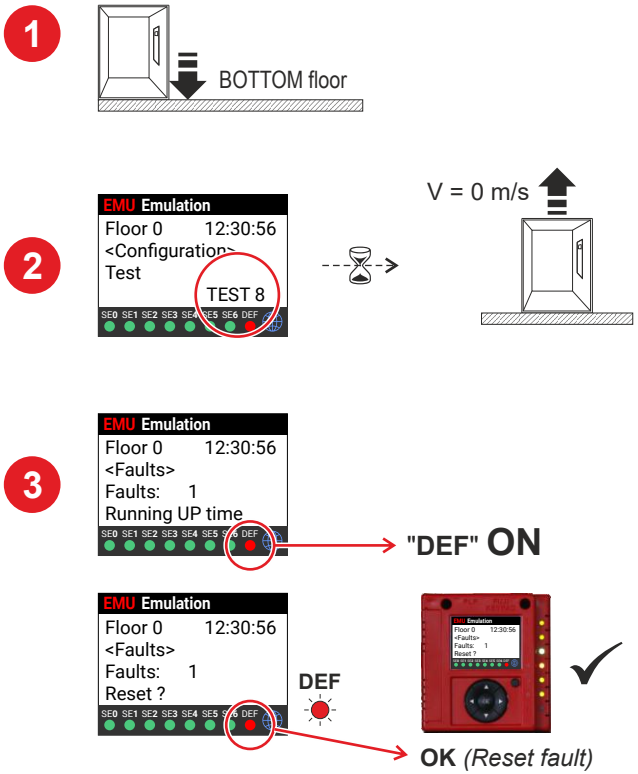

ROPES CREEP TEST

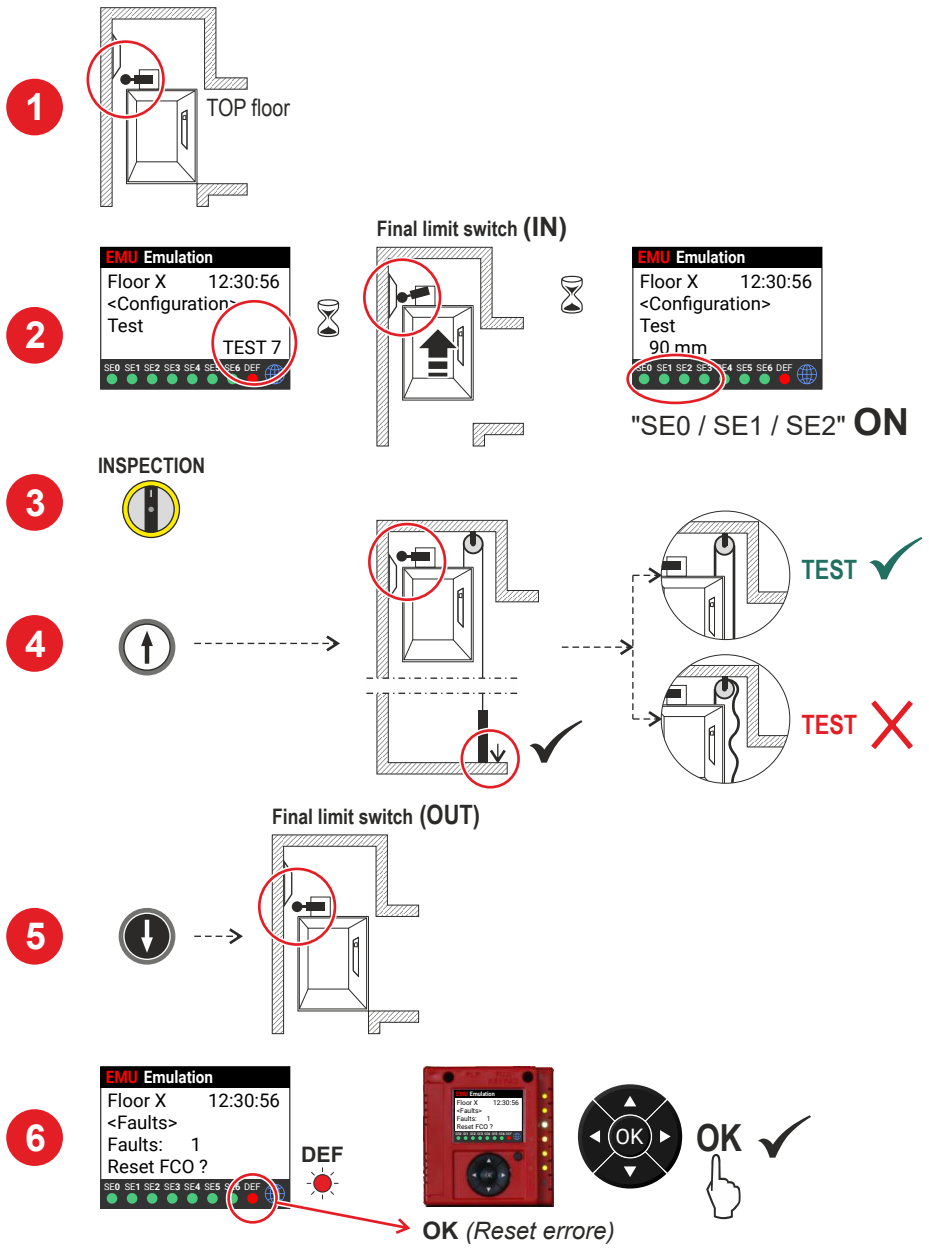

OVERSPEED GOVERNOR TEST

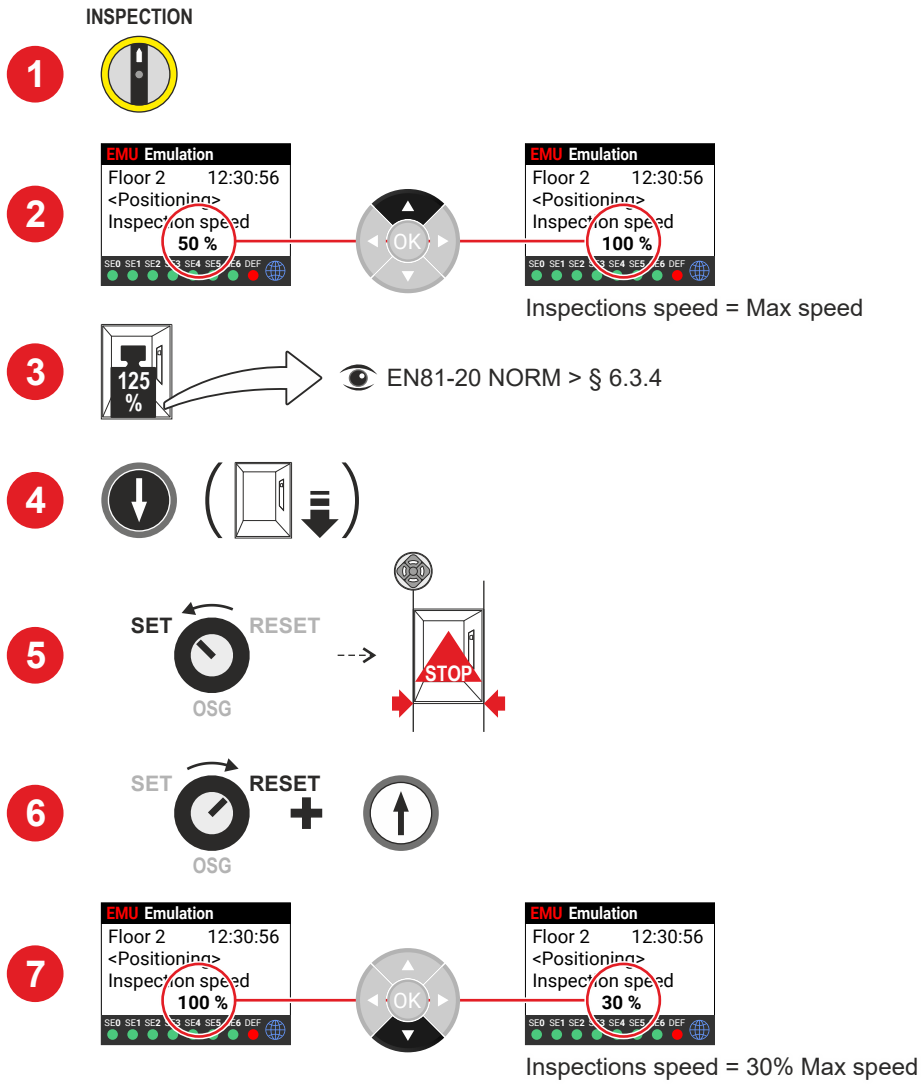

BASIC TROUBLESHOOTING

Follow this first-level procedure to detect and remove the most common faults:

1 Check Diagnostic LEDs (VVVF unit)

LED 1
LED 2
LED 3
LED 4
LED 5
LED 6
LED 7

LED1 (Green led): NOT used

LED2 (Green led): CAN Cabin termination active: led switch off when an optional board (PIT8 / 16IO / 16RL) is connected to the controller (termination automatically moves on last optional board).

LED3 (RGB led): System status Led (see table):

Led Color	*Status*
Led Off	*The system is performing the reset procedure*
Green	*The system is in normal operation mode*
Yellow	*The system is in inspection mode*
Pink	*The system is in temporary operations mode*
Purple	*The system is out of service (parking of cabin)*
Cyan	*The system is running in priority mode (LOP / CAR)*
Red	*The system is operating in Fire-fighters mode*
White	*The system is performing the emergency procedure*
Blue	*The system is performing the elevator car drift control procedure*

LED4 (Yellow led): Led blinks when board is running.

LED5 (Green led): Led on gives the status of SE5 safety chain

LED6 (Green led): Led on indicates the presence of the lift car in the door zone area.

LED7 (Red led):

Led Off	No fault active
Led Flashing	One (or more) fault active
Led On	Locking fault active

2 Read error messages on the PlayPad error menu / Fusion error page

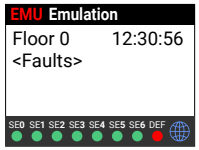

ENTER

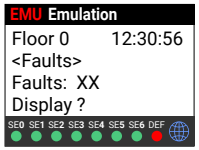

ENTER

- Error X of XX total.
- Code/description error.
- Car position when the fault was detected.
- Number of repetitions of the same error.
- Additional code.
- Date and time of last detection.
- (*) If the error is still active.

This Menu lists the last faults stored into the internal memory of the controller. All faults are described in the **Troubleshooting guide.** *See leaflet on the back of this guide.*

WARNING: In case of black out, the internal memory is saved only if the battery is connected.

3 If the car is blocked with people inside

Perform the RESCUE OPERATION as shown on the following page ---------- >>>

RESCUE OPERATION FOR TRACTION LIFTS

IF THE CAR IS BLOCKED -------->

After pressing the ZP button (door zone) you have 1 hour (default) to carry out the maneuver. If the procedure takes longer, press it again.

1 — *MAIN PROTECTION SWITCH* **OFF**

2 — **ZP** *(door zone)*

Push and Release

ZP **ON**

DOOR ZONE

ZP **OFF**

Go to step 3.

3 — *Open the brake using the special lever on the winch and at the same time turn the handwheel in the direction of easier movement or less effort.*
Move the car until reaching the first useful floor (green light on).

4 — DOOR ZONE

ZP **ON**

Stop the elevator maneuver when the green ZP warning light comes on.

5 — OPEN — EXIT

6 — *During and after the manual maneuver, make sure that all the landing doors are closed and locked and inform the maintenance company. If the system is to remain out of service for more than 14 hours, move the car to the lowest floor.*

ADVANCED SETTINGS

1 Defining the position of the main floor

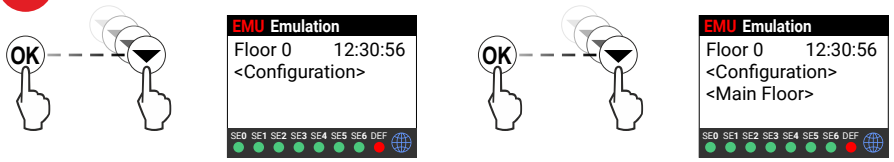

- All calls below this floor are served only upwards (only down collective).
- Lift not in use goes to Main Floor after xx seconds (this parameter can be set in the menu "Special features > Automatic return")

2 Setting date / time

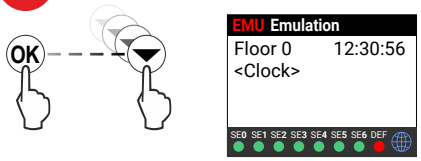

Da = Day
Mo = Month
Yr = Year
D = Weekday (1=Mon)
Hr = Hours
Mn = Minutes

3 Defining a protected floor

If a protected floor is programmed, when the elevator car reaches the floor, the door does not open, instead the monitor will show images coming from the camera corresponding to that floor. Doors can be opened only by pressing the OPEN DOOR button; if this does not happen, the lift moves to the previous floor and then stops the protected floor mode (this operating mode is only possible with DMG's monitoring system).

4 Changing door assignment / layout

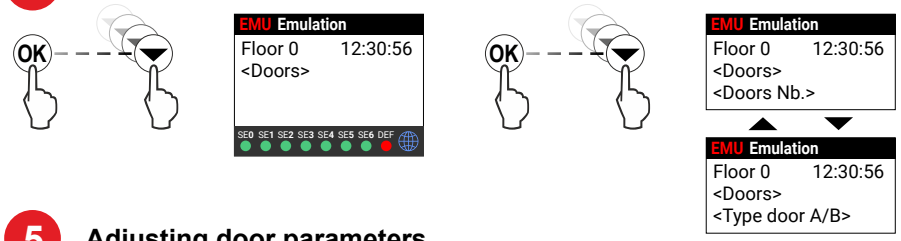

- Manual doors at floors / car doors manual or not present.
- Manual doors at floors / car doors independent.
- Manual doors at floors / car doors automatic.
- Automatic doors at floors and in the car.

5 Adjusting door parameters

In the "Doors" menu it is possible to manage other parameters such as:

- *Time before activation of the retiring ramp and the lock fault*
- *Time before door opening*
- *Life car parking time with open doors*
- *Time before door closes in case of registered calls*
- *Many other settings*

DMG SpA *• Via delle Monachelle, 84/C • 00071 POMEZIA (ROMA) - ITALIA*
Tel. +39 06930251 • www.dmg.it